Semantic Infrastructure

Constraint, Projection, and Accessibility
Across Computation, Cognition, and Cosmology

Gesture · Symbol · Logic · Language · Learning · Civilization

Flyxion

Independent Researcher

Draft — May 30, 2026

$(\Phi, \mathbf{v}, S)$

Contents

Preface **xiii**

I Foundations **1**

1 The World Before Objects **3**
1.1 Why Trajectories Are More Fundamental Than Things 3
1.2 The Map–Territory Distinction 4
1.3 Constraint Before Content 5
1.4 Accessibility Before State 6

2 Regions, Boundaries, and Collapse **9**
2.1 Containment as a Primitive Operation 9
2.2 Nested Structures 10
2.3 Recursive Evaluation 11
2.4 Constraint Boundaries 12
2.5 Why Collapse Appears in Logic, Computation, and Perception 13
2.6 Boundaries as Information Generators 14

3 Spherepop as Visual Computation **17**
3.1 Origins of Spherepop 17
3.2 Nested Bubbles 18
3.3 Reading Order 19
3.4 The Pop Operator 20
3.5 Collapse as Evaluation 20
3.6 Visual Examples from Arithmetic 21
3.7 Relationship to Lisp Trees and Expression Parsing 22
3.8 Spherepop Beyond Arithmetic 22

4 Canonicalization and Equivalence **25**
4.1 Why Different Trajectories Represent the Same Object 25
4.2 Gesture Equivalence 26
4.3 Typing Equivalence 27

4.4 Mathematical Equivalence Classes . . . 27
4.5 Canonical Forms . . . 28
4.6 Fiber and Projection Viewpoints . . . 29
4.7 Canonicalization in the RSVP Framework . . . 30
4.8 The Canonicalization Principle . . . 31

II Spherepop Calculus 33

5 Basic Syntax 35
5.1 Spheres . . . 35
5.2 Containment . . . 36
5.3 Operators . . . 36
5.4 Reading Conventions . . . 36
5.5 Bracket Notation . . . 37
5.6 Translation Between Symbolic and Spherepop Forms . . . 37

6 Evaluation Dynamics 39
6.1 The Pop Operation . . . 39
6.2 Refusal . . . 39
6.3 Binding . . . 40
6.4 Collapse Operators . . . 41
6.5 Reduction Sequences . . . 42
6.6 Termination Conditions . . . 42
6.7 Confluence . . . 43

7 Geometry of Expressions 45
7.1 Expressions as Topological Objects . . . 45
7.2 Nesting Depth as a Geometric Quantity . . . 45
7.3 Constraint Shells . . . 46
7.4 Evaluation Paths . . . 46
7.5 The Expression Manifold . . . 47
7.6 Visualization Techniques . . . 48

8 Semantic Renormalization 51
8.1 The Collapse Operator Revisited . . . 51
8.2 Compression . . . 52
8.3 Abstraction . . . 52
8.4 Quotient Structures . . . 53
8.5 Relationship to Admissibility . . . 54
8.6 Connection to CLIO and Semantic Fields . . . 54

9 Action Histories and Spherepop Dynamics **57**
9.1 The Spherepop Lagrangian 57
9.2 Action Histories 58
9.3 Commitment Variables 58
9.4 Remaining Freedom 59
9.5 Accessibility Measures 60
9.6 Connection to Decision Theory 60
9.7 Connection to RSVP 61

III Gesture Before Symbol **63**

10 Gesture as Primary Reality **65**
10.1 Developmental Evidence 65
10.2 The Gesture Manifold 66
10.3 Motor Structure as the Substrate of Meaning 67
10.4 Evolutionary Evidence 68

11 Trajectories and Admissibility **71**
11.1 Gesture Manifolds 71
11.2 Constraint Spaces on Trajectory Space 72
11.3 Motor Equivalence Classes Revisited 72
11.4 Canonical Gestures 73
11.5 Accessibility of Gesture Continuations 73

12 Keyboards as Gesture Sensors **75**
12.1 Typing as Coordinated Motor Behavior 75
12.2 The Hidden Signal Beneath Text 76
12.3 Overlap, Pivots, and Release Structures 77
12.4 Inter-Hand Coordination 77
12.5 Keyboard Geometry Revisited 78

13 Gesture Reconstruction as Inverse Inference **81**
13.1 Why Classification is Insufficient 81
13.2 Trajectory Reconstruction 82
13.3 Embodied Semantics 82
13.4 Constraint Multiplication 83
13.5 Latent Intention 84
13.6 The Inverse Inference Principle 84

IV Admissibility and Constraint Theory 87

14 Accessibility Landscapes 89
14.1 Admissible Futures . . . 89
14.2 Constraint Geometry . . . 90
14.3 Navigation Over Possibility Spaces . . . 90
14.4 Accessibility Wells, Peaks, and Ridges . . . 91

15 CLIO and Constraint-Leveraged Inference 93
15.1 Constraint as Computation . . . 93
15.2 Sparse Projection . . . 94
15.3 Search Without Exhaustive Search . . . 94

16 Projection Engines 97
16.1 Outputs as Projections . . . 97
16.2 Text as Projection . . . 98
16.3 Music as Projection . . . 98
16.4 Images as Projection . . . 98
16.5 Shared Latent Structures . . . 99

17 Sheaves, Fibers, and Gluing 101
17.1 Local Consistency . . . 101
17.2 Global Coherence . . . 102
17.3 Knowledge Integration . . . 102
17.4 User-Independent Generalization . . . 102

V RSVP and Cosmological Accessibility 105

18 The Relativistic Scalar–Vector Plenum 107
18.1 Historical Development . . . 107
18.2 Core Fields: $(\Phi, \mathbf{v}, S)$ . . . 108
18.3 Entropy and Accessibility . . . 108
18.4 The RSVP Field Equations . . . 109
18.5 Lamphron–Lamphrodyne Dynamics . . . 109

19 Accessibility Relaxation 111
19.1 Replacing Expansion . . . 111
19.2 Accessibility Gradients . . . 112
19.3 Entropic Smoothing . . . 113
19.4 Lamphron–Lamphrodyne Dynamics Revisited . . . 113

20 The Fall of Space 115

20.1 Space as Relaxation . . . 115
20.2 Structure Without Expansion . . . 116
20.3 Constraint Descent . . . 116
20.4 Observable Consequences . . . 116

21 Cosmology as Accessibility Geometry **119**
21.1 Universes as Accessibility Landscapes . . . 119
21.2 The Hourglass and Logarithmic-Time Sketches . . . 119
21.3 Past and Future as Topological Sectors . . . 120
21.4 Heat Death as Accessibility Collapse . . . 121

VI Consciousness and Semantic Fields **125**

22 Simulated Agency **127**
22.1 Projection-Based Consciousness . . . 127
22.2 Sparse Inference . . . 128
22.3 The IAD Correspondence . . . 129
22.4 Latent Worlds . . . 129
22.5 Consciousness as Accessibility Navigation . . . 130

23 Chain of Memory **133**
23.1 Memory as Constraint Preservation . . . 133
23.2 Trajectory Reconstruction . . . 134
23.3 Identity Over Time . . . 135
23.4 The Chain Operator . . . 136
23.5 Collective Memory and Semantic Infrastructure . . . 137

24 Meaning as Geometry **139**
24.1 Semantic Fields . . . 139
24.2 Qualia as Invariants . . . 140
24.3 Constraint Basins . . . 140
24.4 Coherence Structures . . . 141
24.5 Zero Ontology and Semantic Geometry . . . 142

VII Infrastructure and Civilization **145**

25 Semantic Infrastructure **147**
25.1 Beyond Files and Folders . . . 147
25.2 Semantic Modules and Homotopy Merges . . . 148
25.3 Knowledge Evolution . . . 149

25.4 Semantic Version Control 149
25.5 Obstruction Cohomology 150

26 Xyloarchy and Living Systems **153**
26.1 Forest Intelligence 153
26.2 The Mycorrhizal Network as Semantic Module System 154
26.3 Paper Mills and Epistemic Ecology 154
26.4 Cities as Organs 155
26.5 Constraint Ecology 156

27 Yarncrawler Systems **159**
27.1 Repair Networks 159
27.2 Moving Infrastructure 160
27.3 Adaptive Maintenance 160
27.4 Stigmergic Planning 161
27.5 Connection to Semantic Infrastructure 162

VIII Mathematical Foundations: Logic and Boolean Geometry **165**

28 Logic as Geometry: The Boolean Landscape **167**
28.1 The Curriculum Question 167
28.2 The Space of Binary Connectives 168
28.3 Logic as Accessibility Geometry 169
28.4 The Penteract and Hypercube Splitting 170
28.5 Seven Curricula, One Landscape 170

IX Symbols, Alphabets, and Compression **173**

29 From Gesture to Glyph **175**
29.1 How Movement Becomes Mark 175
29.2 The Stabilization of Traces 176
29.3 Why Writing Systems Emerge 176
29.4 Gesture Fossilization 177

30 The Geometry of Alphabets **179**
30.1 Letters as Compressed Shapes 179
30.2 Symmetry, Rotation, Reflection 180
30.3 Stroke Economy 180
30.4 The Accessibility Landscape of Alphabets 181

31 Orthographic Evolution **183**

31.1 Arabic: Cursive Optimization . . . 183
31.2 Latin: From Majuscule to Minuscule . . . 184
31.3 Greek, Coptic, and Constructed Scripts . . . 184
31.4 Constructed Scripts as Constraint Satisfaction . . . 184
31.5 Why Alphabets Drift Over Centuries . . . 185

32 Semantic Compression Through Writing **187**
32.1 Writing as a Storage Technology . . . 187
32.2 The Economics of Symbols . . . 188
32.3 Compression versus Expressiveness . . . 188
32.4 The Renormalization of Writing . . . 190

X Navigation Through Knowledge **193**

33 Beyond Files and Folders **195**
33.1 The Limitations of Hierarchical Storage . . . 195
33.2 Knowledge as Terrain . . . 195
33.3 The Link as the Primary Object . . . 196

34 Semantic Zoom **199**
34.1 Scale-Dependent Representations . . . 199
34.2 Micro, Meso, and Macro Views . . . 200
34.3 Context-Sensitive Abstraction . . . 200

35 Knowledge Landscapes **203**
35.1 Browsing as Navigation . . . 203
35.2 Maps versus Indexes . . . 204
35.3 Exploration and Exploitation in Knowledge . . . 204
35.4 Semantic Terrain and Physical Terrain . . . 204

36 Interfaces as Cognitive Prosthetics **207**
36.1 Tools That Extend Memory . . . 207
36.2 Tools That Extend Attention . . . 208
36.3 Tools That Extend Reasoning . . . 208

XI The Architecture of Learning **211**

37 Learning as Infrastructure **213**
37.1 Knowledge Accumulation . . . 213
37.2 Maintenance Costs . . . 214
37.3 Forgetting as Accessibility Pruning . . . 214

37.4 Reconstruction over Retention 214

38 Exploration versus Exploitation **217**
38.1 Discovery 217
38.2 Practice 218
38.3 Mastery and Novelty 218

39 Organizing a Mind **221**
39.1 Notes 221
39.2 Memories 222
39.3 Projects 222
39.4 Archives 223

40 Read–Evaluate–Print Loops **225**
40.1 Feedback Cycles in Learning 225
40.2 Revision Systems 226
40.3 Constraint-Guided Growth 226

XII Simulated Worlds **229**

41 Games as Cognitive Laboratories **231**
41.1 Why Games Teach 231
41.2 Artificial Constraints as Epistemic Tools 232
41.3 Exploration Under Rules 232

42 Procedural Universes **235**
42.1 Generation 235
42.2 Emergence 235
42.3 Constraint Satisfaction in World Construction 236

43 Virtual Ecology **237**
43.1 Agents and Resources 237
43.2 Adaptation 237
43.3 Civilizations 238

44 The Universe as a Simulation Medium **239**
44.1 Not Simulation Theory 239
44.2 Simulation as Epistemic Technique 240
44.3 Building Worlds to Understand Worlds 240

XIII Universal Classification 243

45 The Search for Shared Structure 245
45.1 Patterns That Recur Across Domains . . . 245
45.2 Analogical Reasoning . . . 246
45.3 Cross-Disciplinary Transfer . . . 246

46 Morphological Taxonomy 249
46.1 Shape, Function, Behavior, Constraint . . . 249
46.2 When Categories Fail . . . 250
46.3 Functional Classification . . . 250

47 Ontological Engineering 253
47.1 Building Categories . . . 253
47.2 Revising Categories . . . 254
47.3 When Categories Fail and How to Fix Them . . . 254

48 The Sociology of Knowledge 257
48.1 Scientific Institutions as Knowledge Infrastructure . . . 257
48.2 Classification Systems as Social Technologies . . . 257
48.3 Educational Structures as Accessibility Engineering . . . 258
48.4 Cultural Memory . . . 258

XIV Civilization as Computation 261

49 Collective Memory 263
49.1 Libraries . . . 263
49.2 Archives . . . 264
49.3 The Internet as Collective Memory . . . 264
49.4 Civilizational Recall . . . 264

50 Educational Architecture 267
50.1 Learning Environments . . . 267
50.2 Curricula . . . 268
50.3 Constraint-Guided Teaching . . . 269

51 Knowledge Ecosystems 271
51.1 Researchers . . . 271
51.2 Institutions . . . 272
51.3 Information Flow . . . 272
51.4 Ecological Health Metrics . . . 272

52 Toward a Semantic Civilization **275**
52.1 Meaning-Centered Infrastructure 275
52.2 Constraint-Aware Systems 276
52.3 Human–AI Collaboration 276
52.4 Future Directions 277
52.5 The Last Collapse 278

Sets, Relations, and Constraint Spaces **281**

Projection Theory and Information Loss **285**

Spherepop Calculus **289**

Boolean Lattices and Logical Geometry **293**

Hypercubes and Dimensional Aggregation **297**

Gesture Manifolds and Canonicalization **299**

Keyboard Geometry and Motor Fields **301**

Admissibility and Constraint Closure **303**

Sheaf Theory and Semantic Coherence **305**

Accessibility Geometry **307**

The Relativistic Scalar–Vector Plenum **309**

Semantic Fields and Simulated Agency **311**

Semantic Infrastructure and Category Theory **313**

Learning Geometry and Curriculum Dynamics **315**

Civilization Dynamics and Collective Memory **317**

Bibliography **319**

List of Figures

1.1 Nested constraint spaces as concentric accessibility regions. Outer region: $\mathcal{A}(c_1)$. Middle: $\mathcal{A}(c_1 \wedge c_2)$. Inner core: $\mathcal{A}(c_1 \wedge c_2 \wedge c_3)$, the most constrained accessible set. The RSVP scalar field Φ attains its minimum at the core. . 5

2.1 Constraint boundaries in a two-dimensional state space. The admissible region A (shaded) is bounded by the constraint surface ∂A (thick curve). Trajectories inside A° flow freely along the vector field $\mathbf{v}$. Near ∂A, the accessibility gradient ∇S curves trajectories inward. The collapse operator projects boundary-crossing trajectories back into A. 12

3.1 Spherepop evaluation of $1+3\times 2^2 = 13$. Each frame shows the expression after one pop. The innermost bubble collapses first, reducing depth at each step. The complexity functional $C(E)$ decreases $3 \to 2 \to 1 \to 0$. . . 19

4.1 Fiber and projection geometry. The expression space X (top) contains many expressions that canonicalize to the same value in $c(X)$ (bottom). The projection c collapses each fiber to a point. The fiber over the canonical form $z = 12$ contains all expressions that evaluate to 12: (3×4), $(2^2 \times 3)$, $(13 - 1)$, and infinitely many others. 30

7.1 Constraint shells in the Spherepop expression $1 + (3 \times (2 \uparrow 2))$. Shell 0 (outermost, depth 0) contains the $+$ operator. Shell 1 contains $\times$. Shell 2 (innermost) contains $\uparrow$ and the atoms $2, 2$. Evaluation proceeds shell 2 $\to$ shell 1 $\to$ shell 0. 47

8.1 The renormalization tower of Spherepop expressions. Each level integrates out one more layer of syntactic detail, replacing it with effective values. The bottom level contains only atoms: fully evaluated, maximally compressed expressions. 53

9.1 Complexity $C(E_t)$ and accessibility entropy S_t as functions of evaluation step t. Both decrease monotonically to zero at the terminal state. C decreases by exactly 1 per step; S decreases more smoothly, capturing the branching structure of the evaluation space. 60

10.1 The gesture manifold $\mathcal{G}$ with three regions: the admissible trajectory space $\mathcal{A}(\mathcal{C})$ (outer shell), the motor equivalence classes $[\gamma]_\sim$ (middle layer, shown as vertical fibers), and the symbolic projection Σ^* (the base, projected downward). The compression map κ collapses each fiber to a single symbol. 66

24.1 Constraint basins in the semantic manifold. Each basin (shaded region) surrounds an attractor (filled circle) corresponding to a concept. The accessibility gradient ∇S_s drives semantic states toward their nearest attractor. Basin boundaries (thick curves) are the separatrices of the gradient flow — the edges of meaning. 141

28.1 The Hasse diagram of B_2: all 16 binary Boolean connectives ordered by truth-set inclusion. Bottom: contradiction ($\bot = 0000$). Top: tautology ($\top = 1111$). Highlighted amber path traces $\bot \to$ NOR $\to \neg A \to$ NAND $\to \top$. Highlighted purple path traces $\bot \to$ AND $\to \neg B \to$ OR $\to \top$. 169

1 Spherepop evaluation of $1 + 3 \times 2^2$. Each step collapses an innermost sphere (nested region). The complexity functional $C(E)$ decreases monotonically: $3 \to 2 \to 1 \to 0$. 290

2 Hasse diagram of the 16 binary Boolean connectives. Nodes are labeled by their 4-bit output pattern. Highlighted paths trace two chains from $\bot$ (0000) to $\top$ (1111): the amber path through NOR $\to \neg A \to$ NAND, and the purple path through AND $\to \neg B \to$ OR. 294

Preface

This work begins with a suspicion: that arithmetic, gesture, language, cognition, computation, and cosmology are not separate domains connected by analogy, but *different coordinate systems for the same underlying geometry*.

The geometry in question is not Riemannian in the standard sense. It is the geometry of *accessibility* — of what states are reachable from here, under what constraints, along which trajectories, with how much remaining freedom. Five frameworks developed independently across a decade of work converge, when viewed at the right angle, on this single organizing principle:

Spherepop (collapse) **Gesture** (trajectory) **Admissibility** (constraint)

RSVP (accessibility) **Semantic Infrastructure** (composition)

These are not five theories. They are five projections of one theory onto five different observable screens.

Part I of this monograph builds the foundations from scratch, requiring only mathematical maturity and patience. Later parts assume familiarity with the earlier material. The appendices collect the formal machinery for readers who prefer to start from definitions.

A note on style. The prose aims to be precise without being arid. Boxed definitions, theorems, and examples are formally numbered. Asides and historical notes are set off visually but are not peripheral — they are often where the conceptual work happens. Exercises are provided at the end of most chapters; starred exercises are open problems.

Flyxion
Canada, 2026

Part I

Foundations

1

The World Before Objects

The map is not the territory, but the territory is not an object either — it is a field of accessible trajectories.
— Flyxion, *Semantic Infrastructure*

This monograph begins not with things but with *access*. The received view in both physics and computation treats objects as primitive: particles, states, data structures. We argue instead that *accessibility landscapes* are the more fundamental substrate, and that objects emerge as *stable projections* of constraint geometry.

RSVP: see Ch. 18

The key shift is from asking *what exists* to asking *what is reachable from here*.

1.1 Why Trajectories Are More Fundamental Than Things

Conceptual Aside: The Accessibility Inversion

Classical ontology asks: *what things are there?* Accessibility ontology asks: *what transitions are available to a system in state q at time t?*
This is not a merely philosophical point. In the RSVP framework, the scalar field Φ encodes *potential accessibility*, the vector field $\mathbf{v}$ encodes *directed flow toward accessible states*, and the entropy S measures the *remaining freedom* of the system. Objects — particles, thoughts, texts — are basins in this landscape.

A trajectory through configuration space carries strictly more information than any instantaneous state description. The gesture literature (McNeill 1992) makes this vivid: a pointing gesture cannot be decomposed into a sequence of hand-positions without losing its meaning. The *arc* is the meaning.

Definition 1.1: Trajectory

Let $\mathcal{Q}$ be a configuration space with metric g. A *trajectory* is a smooth map

$$\gamma : [0, T] \longrightarrow \mathcal{Q}$$

satisfying the admissibility condition $\gamma(t) \in \mathrm{Adm}(\mathcal{C}(t))$ for all $t \in [0, T]$, where $\mathcal{C}(t)$ is the active constraint set at time t.

> ⋆ **Remark**
>
> The admissibility condition is the crucial clause. It is not enough that γ be smooth — it must remain *within the accessible region* at each instant. This is what distinguishes a gesture from arbitrary hand motion. See Chapter 14 for the formal definition of admissibility.

1.2 The Map–Territory Distinction

Alfred Korzybski's maxim is often quoted but rarely made precise. We offer a precise formulation in terms of projection:

Theorem 1.1: Map–Territory Projection Theorem

Let $\mathcal{T}$ be a territory (a topological space with accessibility structure $\mathcal{A}$) and let $\mathcal{M}$ be a map (a representation space). Any faithful map-making procedure is a continuous projection

$$\pi : \mathcal{T} \longrightarrow \mathcal{M}$$

with non-trivial fibers $\pi^{-1}(m) \neq \{*\}$ for generic $m \in \mathcal{M}$. Information not recovered from π alone lives in the fiber.

Proof. Suppose π were injective. Then the map would encode the territory completely, contradicting the finite description length of any symbol system relative to the continuous structure of $\mathcal{T}$. By the Löwenheim–Skolem theorem applied to the first-order theory of $\mathcal{T}$, there exist non-isomorphic models sharing the same map; these constitute the fiber. ■

Example

GPS coordinates map Earth's surface to $\mathbb{R}^2$. The fiber over any coordinate pair includes altitude, subsurface structure, biological activity — all accessible from

that location but invisible in the map.

1.3 Constraint Before Content

Historical Note

The priority of constraint over content has deep roots. Ibn Sina's distinction between *mahiyyah* (quiddity) and *wujūd* (existence) anticipates it: the essence of a thing is its constraint structure, not its realized content. In the Latin tradition, Aquinas transforms this into the act/potency distinction.

In modern terms: a program's type signature constrains its behavior before any value is computed. A physical field equation constrains accessible trajectories before any solution is specified. Grammar constrains utterances before any word is chosen. Content *projects* from constraint.

$\mathcal{C}$: constraint space

Definition 1.2: Constraint Space

A *constraint space* $(\mathcal{C}, \leq)$ is a partially ordered set of constraints, where $c_1 \leq c_2$ means c_1 is *more restrictive* than c_2. The *accessibility set* at $c \in \mathcal{C}$ is

$$\mathcal{A}(c) \;=\; \{q \in \mathcal{Q} \mid q \text{ satisfies } c\}$$

Constraint addition is set intersection: $\mathcal{A}(c_1 \wedge c_2) = \mathcal{A}(c_1) \cap \mathcal{A}(c_2)$.

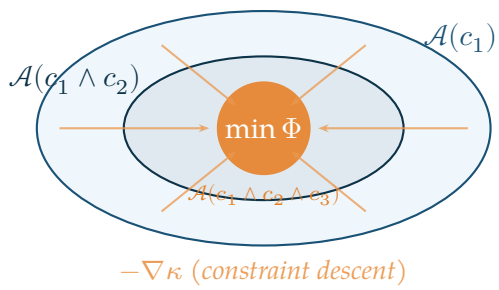

Figure 1.1. Nested constraint spaces as concentric accessibility regions. Outer region: $\mathcal{A}(c_1)$. Middle: $\mathcal{A}(c_1 \wedge c_2)$. Inner core: $\mathcal{A}(c_1 \wedge c_2 \wedge c_3)$, the most constrained accessible set. The RSVP scalar field Φ attains its minimum at the core.

1.4 Accessibility Before State

Classical state-based systems are deterministic: a state q at time t determines the state at $t + \delta t$ via a transition function. But this assumes the transition function *already exists* — that the dynamics are given. In the RSVP framework we ask: where does the transition function come from?

> **Warning**
>
> State-based models smuggle accessibility assumptions into the transition function without acknowledging them. When the function is undefined — at phase transitions, at cognitive insight, at cosmological singularities — the state-based model collapses to silence. Accessibility geometry provides the right substrate for modeling these boundary cases.

The RSVP answer is: transition functions *are* accessibility gradients. The coupled field equations

$$\partial_t \Phi = -\nabla \cdot \mathbf{v} + \alpha \Delta \Phi \tag{1.1}$$

$$\partial_t \mathbf{v} = -(\mathbf{v} \cdot \nabla)\mathbf{v} - \nabla \Phi + \beta \Delta \mathbf{v} \tag{1.2}$$

$$\partial_t S = \sigma(\Phi, \mathbf{v}) - \gamma S \tag{1.3}$$

define the *accessibility relaxation dynamics*: the system flows toward states of higher admissibility under the current constraint structure.

Exercises

Exercise

Let $\mathcal{Q} = \mathbb{R}^3$ and let $\mathcal{C}$ consist of a single linear constraint $c : \mathbf{q} \cdot \mathbf{n} = 0$ for some unit normal $\mathbf{n}$. Describe $\mathcal{A}(c)$ geometrically. What is $\mathcal{A}(c \wedge c')$ when c' adds a second independent constraint?

Exercise

Formalize the GPS example from Theorem 1.1 as a projection $\pi : \mathbb{R}^3 \to \mathbb{R}^2$. Describe the fiber over a point in $\mathbb{R}^2$. What additional structure (beyond the projection) would be needed to recover altitude information?

Harder

Show that the poset $(\mathcal{C}, \leq)$ with the operation $c_1 \wedge c_2$ forms a semilattice. Under what conditions does it form a complete lattice? What is the interpretation of the top element $\top \in \mathcal{C}$ in terms of $\mathcal{A}$?

2

Regions, Boundaries, and Collapse

A boundary is not a wall between two things.
It is the definition of both things at once.
— Flyxion, *Semantic Infrastructure*

The previous chapter established that accessibility precedes state, that trajectories are more fundamental than things. This chapter examines the second primitive operation from which everything else is built: *containment*.

See App. A for constraint spaces; App. C for Spherepop collapse

Before symbols, before operators, before logic — there is the boundary. The inside and the outside. The contained and the containing. This observation is not merely geometric. It is the deep structure of computation, perception, and reasoning.

2.1 Containment as a Primitive Operation

Consider how children first encounter mathematics. Not through equations. Through regions: *this block is inside the box; that one is outside*. The inside/outside distinction precedes counting, precedes addition, precedes everything that adult mathematics calls fundamental. Containment is the first cognitive operation.

Definition 2.1: Containment Relation

Let X be a topological space. A *containment relation* on X is a binary relation $\subset$ on subsets of X satisfying:

1. **Transitivity:** if $A \subset B$ and $B \subset C$ then $A \subset C$.
2. **Antisymmetry:** if $A \subset B$ and $B \subset A$ then $A = B$.
3. **Non-triviality:** there exist A, B with $A \subsetneq B$.

The third condition is what distinguishes a containment relation from a trivial one. The existence of proper containment — something genuinely inside something else — is the primitive productive operation. Everything in logic, computation, and language follows from this.

Historical Note

George Spencer-Brown's *Laws of Form* (1969) derived all of Boolean algebra from a single primitive: the *mark*, which distinguishes an inside from an outside. The mark creates a boundary; the boundary creates two regions; all logical operations follow from the arrangement and crossing of boundaries. Spencer-Brown showed that the fundamental operation of logic is not AND or OR — it is *distinction*. The Spherepop formalism can be understood as a dynamical extension of this insight: not just distinctions, but distinctions that *collapse*.

2.2 Nested Structures

Containment becomes productive when it is *iterated*. A region inside a region inside a region — this is the structure of nested evaluation, nested scope, nested context.

Definition 2.2: Nesting Sequence

A *nesting sequence of depth* n is a chain

$$A_1 \subsetneq A_2 \subsetneq \cdots \subsetneq A_n$$

of proper containments. The *depth* of an element $x \in A_1$ within A_n is n.

Depth is the key quantity. It measures how many boundary crossings lie between a point and the outermost context. In programming, depth is scope level. In logic, depth is quantifier nesting. In Spherepop, depth is evaluation priority: the innermost sphere collapses first.

Example

In the arithmetic expression $1 + (3 \times 2^2)$, the subexpression 2^2 has depth 2 (inside the multiplication, inside the addition). The multiplication $3 \times (\cdot)$ has depth 1. The addition has depth 0. Spherepop evaluation collapses innermost regions first: depth 2 before depth 1 before depth 0. This is not a convention — it is the *only* consistent order for a containment-based evaluation system.

Proposition 2.1: Depth Determines Evaluation Order

In any containment-based evaluation system with the property that outer regions depend on the values of inner regions, evaluation must proceed from maximum depth toward minimum depth.

Proof. Suppose an outer region $A \supset B$ is evaluated before the inner region B. Then the value of A must reference B's value, which is not yet determined — a contradiction. Therefore B must be evaluated first. ■

This simple observation is the entire theory of operator precedence, scope rules, lazy evaluation, and call-by-value versus call-by-name. All are special cases of depth-first evaluation in a containment hierarchy.

2.3 Recursive Evaluation

Depth-first evaluation in a nesting sequence is inherently recursive. The evaluation of any region reduces to the evaluation of its interior.

Definition 2.3: Recursive Evaluation

Let $\mathcal{E}$ be a set of expressions with a valuation function $\mathrm{val} : \mathcal{E} \to V$. The valuation is *recursive* if for any expression e containing subexpressions $e_1, \dots, e_n$:

$$\mathrm{val}(e) = f(\mathrm{val}(e_1), \dots, \mathrm{val}(e_n))$$

for some combining function f determined by e's outermost operation.

Recursion is not a programming technique. It is the mathematical structure of evaluation in any system organized by containment. The reason recursion feels powerful and natural — and the reason it sometimes feels dizzying — is that it is the native language of nested regions.

Conceptual Aside: Recursion, Containment, and Self-Reference

There is a profound relationship between containment, recursion, and self-reference. A self-referential statement — "this sentence is false" — attempts to contain itself. It is a region that includes itself as a subregion, violating anti-symmetry of containment.

Gödel's incompleteness theorems can be understood as a rigorous version of this observation: any sufficiently expressive formal system contains statements that refer to their own provability status. The system attempts to contain a description of itself within itself. The resulting incompleteness is not a flaw — it is the mathematical consequence of a sufficiently deep containment structure encountering its own boundary.

In RSVP terms: self-reference is the collapse of a region onto its own accessibility set. The system attempts to be its own admissible future. The result is either

fixed-point (stable self-reference) or oscillation (paradox).

2.4 Constraint Boundaries

Not all boundaries are walls. Some boundaries are *constraint surfaces* — the boundary of the admissible region in a constraint space.

Recall from Chapter 1 and Appendix A that a constraint space is a triple (X, A, κ) where $A = \kappa^{-1}(0)$ is the admissible set. The *boundary* of this set:

$$\partial A = \overline{A} \setminus A^\circ$$

is where constraint violations begin. Points inside A° satisfy all constraints; points outside A violate them; points on ∂A are at the exact threshold.

Definition 2.4: Constraint Boundary

The *constraint boundary* of a constraint space (X, A, κ) is ∂A, the topological boundary of the admissible set. The *boundary gradient* at $p \in \partial A$ is $\nabla\kappa(p)$, pointing in the direction of maximum constraint violation.

The constraint boundary plays the same role that a physical boundary plays in classical mechanics: it is where dynamics change character. A trajectory inside A° moves freely; near ∂A it bends; crossing ∂A violates the constraints. The system is reflected, refracted, or absorbed at the boundary depending on the dynamics.

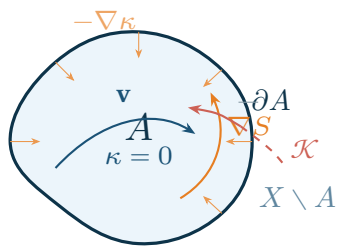

Figure 2.1. Constraint boundaries in a two-dimensional state space. The admissible region A (shaded) is bounded by the constraint surface ∂A (thick curve). Trajectories inside A° flow freely along the vector field $\mathbf{v}$. Near ∂A, the accessibility gradient ∇S curves trajectories inward. The collapse operator projects boundary-crossing trajectories back into A.

2.5 Why Collapse Appears in Logic, Computation, and Perception

The word *collapse* appears throughout this monograph with a consistent technical meaning: the reduction of a nested region to a single value, collapsing the depth hierarchy at one level.

But collapse appears throughout mathematics and physics with the same essential structure:

- **Logical collapse:** a proof reduces a complex proposition to True or False. The interior of the proof — all the intermediate steps — collapses into a single bit.
- **Computational collapse:** function evaluation reduces a complex expression to a value. The call stack — all the nested frames — collapses as it unwinds.
- **Perceptual collapse:** visual processing reduces a high-dimensional retinal image to an object recognition. The hierarchy of features — edges, regions, parts, objects — collapses into a label.
- **Quantum collapse:** measurement reduces a superposition of states to a definite outcome. The probability distribution collapses to a point mass.
- **Semantic collapse:** understanding reduces a complex sentence to a meaning. The tree of syntactic dependencies collapses into an interpretation.

These are not merely analogies. They share a common mathematical structure: a map from a high-dimensional structured space to a lower-dimensional value space, along the direction of decreasing depth.

See Ch. 8 on semantic renormalization

Definition 2.5: Collapse Map

Let (X, A, κ) be a constraint space and let $\mathcal{N}(X)$ be the set of nesting sequences in X. A *collapse map* is a function

$$\mathcal{K} : \mathcal{N}(X) \longrightarrow X$$

satisfying $\mathcal{K}(A_1 \subsetneq \cdots \subsetneq A_n) \in A$ (the result is always admissible) and $\kappa(\mathcal{K}(\cdot)) = 0$ (the result always satisfies all constraints).

The collapse map is admissibility-preserving by construction. This is why evaluation, proof, and perception all produce outputs that *make sense*: collapse maps are defined to land in the admissible region.

Theorem 2.1: Collapse Reduces Depth

Any collapse map $\mathcal{K}$ satisfies $\text{depth}(\mathcal{K}(\sigma)) < \text{depth}(\sigma)$ for any non-trivial nesting sequence σ of depth ≥ 1.

Proof. A non-trivial nesting sequence has depth $n \geq 1$. By definition, $\mathcal{K}(\sigma) \in X$ (a point, not a sequence). The depth of a point in X is 0. Therefore $\text{depth}(\mathcal{K}(\sigma)) = 0 < n$. ■

This theorem is the reason that computation *terminates*: every collapse reduces depth by at least one, and depth is bounded below by zero.

2.6 Boundaries as Information Generators

There is a perspective on boundaries that is easy to miss: a boundary does not divide two regions from each other — it *defines* them both simultaneously. Before the boundary, there is undifferentiated space. After the boundary, there are two distinct regions with mutual complement structure.

Proposition 2.2: Boundary Generates Distinction

Given a topological space X, every closed proper subset $B \subsetneq X$ generates a distinction: the pair $(B, X \setminus B)$ of complementary regions. The information content of this distinction is $I(B) = \log_2 \frac{\mu(X)}{\mu(B) \cdot \mu(X \setminus B)}$ for any probability measure μ on X.

This is why boundaries are computationally productive. A single boundary crossing — a single pop, in Spherepop terms — generates information. The inside and the outside become distinct. Their distinctness is what makes further computation possible.

> ⋆ **Remark**
>
> The perceptron — the fundamental unit of neural networks — is a boundary generator. It draws a hyperplane through feature space, creating an inside and an outside. The entire expressive power of deep networks is built from iterated boundary generation. Universal approximation theorems (Appendix N) say: any continuous function can be approximated by sufficiently many hyperplane boundaries. This is the same claim, in computational language, as the claim that nested containment suffices for all computation.

Exercises

Exercise

Let $X = \{1, 2, 3, 4, 5\}$ and consider the nesting sequence $\{3\} \subsetneq \{2, 3, 4\} \subsetneq X$. What is the depth of each element of X? Define a collapse map $\mathcal{K}$ that maps this nesting sequence to a single element satisfying $\kappa = 0$ where $\kappa(x) = |x - 3|$.

Exercise

Formalize the claim that depth-first evaluation is the only consistent order for containment-based evaluation. Specifically: suppose evaluation proceeds by some other order (breadth-first, random). Construct an expression for which this order produces an undefined or contradictory result.

Topological

The boundary ∂A of a closed set A satisfies $\partial A = \overline{A} \cap \overline{X \setminus A}$. Prove that ∂A is always closed. Give an example where A is open, A is closed, and A is neither open nor closed, showing what ∂A looks like in each case.

Open problem

Define an appropriate notion of *collapse entropy*: the information lost when a nesting sequence of depth n is collapsed to a point. Under what conditions is collapse entropy minimal? Does minimal-entropy collapse correspond to any known computational strategy (memoization, normal-form reduction, canonical representatives)?

3

Spherepop as Visual Computation

The parenthesis is a lie about space.
It claims to enclose what it only annotates.
The sphere actually encloses.

— Flyxion, *Geometry, Cognition, and the Transparency of Computation*

Standard mathematical notation is a historical accident. The bracket $(1 + (3 \times 2^2))$ encodes a spatial relationship — nesting — using a pair of punctuation marks that have no spatial extent. The notation is purely symbolic; it *represents* containment without *being* containment.

App. C gives the full formal treatment

Spherepop takes the spatial interpretation seriously. Expressions are regions. Containment is actual enclosure. Evaluation is collapse. The result is a notation system in which the *picture* of an expression and the *meaning* of an expression are the same thing.

3.1 Origins of Spherepop

⋆ **Remark**

The plenum interpretation of evaluation. Standard notation treats an expression as a string of symbols in empty syntactic space. Spherepop treats it as a physical medium — a structured plenum of nested constraint regions. This is not merely aesthetic. In the relaxing-spring cosmology of Part V, the universe is itself a plenum (the lamphrodyne field) that "evaluates" by reducing constraint violation: high-constraint early states collapse toward lower-constraint equilibria, leaving persistent structures as their residue. Spherepop evaluation is the discrete, finite-depth version of this same dynamics. The pop operator at the innermost sphere is the computational analogue of a quantum event (Chapter 6) — irreversible, local, and constraint-reducing.

The Spherepop formalism arose from a dissatisfaction with the gap between expression and visualization. In conventional notation:

- The tree structure of an expression must be *inferred* from flat text.
- Precedence rules are *remembered*, not *seen*.
- Evaluation order is *computed mentally*, not perceived directly.

A child learning arithmetic must perform three separate cognitive operations: parse the linear string into a tree, remember the precedence rules, and then evaluate bottom-up. Each of these is non-trivial. The notation makes computation harder than it needs to be.

> **Historical Note**
>
> Lisp (1958) was the first major programming language to make expression trees visible in syntax. The expression $1 + 3 \times 4$ becomes `(+ 1 (* 3 4))` in Lisp — a parenthesized tree that matches the evaluation structure exactly. Lisp programmers sometimes call their parentheses "hugs": each open paren hugs its contents. Spherepop replaces the linear hugging with actual spatial enclosure, taking Lisp's structural insight one step further into geometry. The relationship between Spherepop and Lisp is roughly the relationship between a map and a legend: Spherepop makes the spatial structure of computation directly visible rather than encoding it symbolically.

3.2 Nested Bubbles

A Spherepop expression is a planar diagram of nested closed regions — *bubbles*. Each bubble contains either:

1. an atomic value (a number, variable, or constant), or
2. an operator together with its argument bubbles.

The spatial containment *is* the grouping. No parentheses are needed because the containment relation is directly visible.

Definition 3.1: Spherepop Diagram

A *Spherepop diagram* is a planar embedding of a rooted ordered tree into $\mathbb{R}^2$ such that:

- each node v of the tree corresponds to a closed disk $D_v \subset \mathbb{R}^2$,
- if u is the parent of v in the tree, then $D_v \subset D_u^\circ$ (strict interior),
- sibling disks are pairwise disjoint: $D_{v_1} \cap D_{v_2} = \emptyset$ for distinct siblings,

- the label of node v is written inside D_v but outside all children of v.

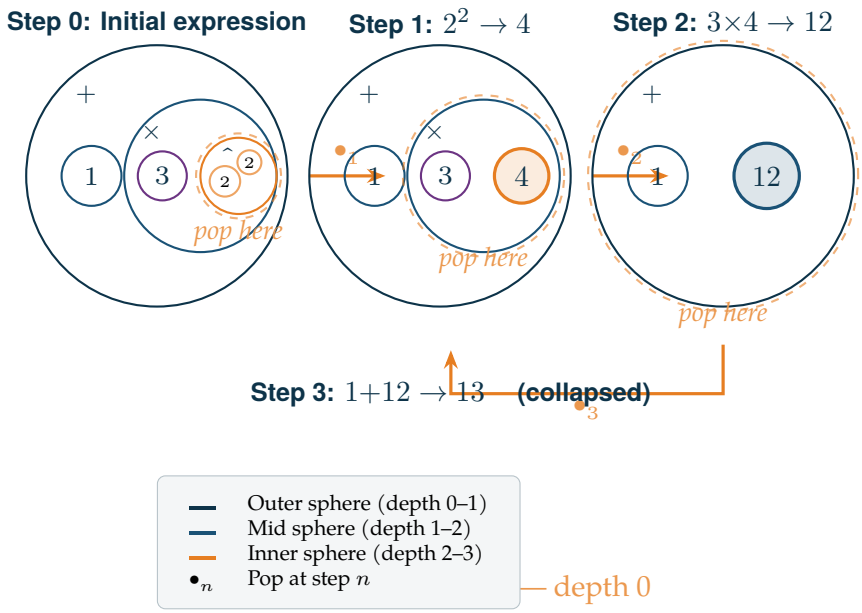

Figure 3.1. Spherepop evaluation of $1 + 3 \times 2^2 = 13$. Each frame shows the expression after one pop. The innermost bubble collapses first, reducing depth at each step. The complexity functional $C(E)$ decreases $3 \to 2 \to 1 \to 0$.

3.3 Reading Order

A conventional mathematical expression is read left-to-right, with precedence rules overriding the linear order. A Spherepop diagram is read *inside-out*: innermost bubbles are read first, outermost last.

This reading order is not arbitrary. It is the *only* reading order consistent with the semantics: you cannot evaluate an outer expression without first knowing the values of its inner arguments.

Proposition 3.1: Unique Canonical Reading Order

In any Spherepop diagram, inside-out reading (depth-first, innermost first) is the unique reading order consistent with compositional semantics.

Proof. This follows directly from Proposition 2.1 of Chapter 2: in any containment-based evaluation system, outer regions depend on the values of inner regions, so inner regions must be evaluated first. ■

The remarkable consequence is that Spherepop notation contains its own reading instructions. A child presented with a Spherepop diagram for the first time, and told only that "inner bubbles evaluate first," has everything they need to compute any arithmetic expression correctly — without memorizing a single precedence rule.

3.4 The Pop Operator

The fundamental operation of Spherepop evaluation is the *pop*: the collapse of an innermost bubble to a single value.

Definition 3.2: Pop

A bubble B is *poppable* if it contains no child bubbles — i.e., it is an innermost bubble containing only atoms and an operator. The *pop* of B replaces B with the result of applying its operator to its atomic arguments.

Example

In the diagram for $1 + (3 \times (2 \uparrow 2))$:

1. First pop: the innermost bubble $(2 \uparrow 2)$ pops to 4.
2. Second pop: the bubble (3×4) pops to 12.
3. Third pop: the outermost bubble $(1 + 12)$ pops to 13.

Three pops, three depth reductions, final result 13.

The pop operator has two important special cases:

Definition 3.3: Refuse and Bind

A bubble *refuses* when it cannot be popped — either because it contains unbound variables, because its operator is undefined on its arguments, or because a protection marker prevents evaluation. A bubble is *bound* when its free variables are assigned values, enabling a previously refusing bubble to pop.

Refusal is not failure — it is *suspended evaluation*. A refusing bubble waits until the conditions for its pop are satisfied. This is the Spherepop model of a closure, a lazy value, or a blocked computation.

3.5 Collapse as Evaluation

The full evaluation of a Spherepop diagram is a sequence of pops that reduces the diagram to a single atomic bubble. This process is *collapse* in the topological sense: the

nested structure contracts level by level until no further nesting remains.

Theorem 3.1: Spherepop Completeness

Every finite Spherepop diagram with no refusing bubbles and no unbound variables collapses to a single atomic bubble in finitely many pops.

Proof. By induction on the depth d of the diagram. For $d = 0$, the diagram is already atomic. For $d \geq 1$, at least one innermost bubble exists (depth-d bubble with no children). This bubble pops, reducing depth by at least one. By induction the resulting depth-$(d-1)$ diagram eventually collapses. ■

This theorem is why Spherepop evaluation terminates. The depth of a diagram is a natural number; each pop reduces it; natural numbers have no infinite descending chains.

3.6 Visual Examples from Arithmetic

The power of Spherepop notation becomes clear in examples where conventional notation is genuinely confusing.

Order of operations

The expression $2 + 3 \times 4$ is ambiguous in natural language ("two plus three, times four"? or "two plus, three times four"?) and requires precedence rules in conventional notation. In Spherepop, the grouping is visible: if $\times$ is a smaller inner bubble and $+$ is the outer bubble, then $3 \times 4 = 12$ pops first and $2 + 12 = 14$ follows. The diagram is unambiguous without any rules.

Nested exponentiation

Consider 2^{2^3}. In conventional notation this is ambiguous: is it $(2^2)^3 = 64$ or $2^{(2^3)} = 256$? In Spherepop, the nesting is spatial: whichever exponentiation bubble contains the other evaluates last. The conventional convention (right-to-left for towers) corresponds to making the rightmost exponent the innermost bubble.

Function composition

$f(g(h(x)))$ in Spherepop is three nested bubbles: $h(x)$ inside $g(\cdot)$ inside $f(\cdot)$. The evaluation order — h then g then f — is directly visible. The notation makes it impossible to confuse $f \circ g \circ h$ with $h \circ g \circ f$.

3.7 Relationship to Lisp Trees and Expression Parsing

Lisp: McCarthy, 1958; see also Church's λ-calculus, 1932

Spherepop diagrams are visual renderings of the *abstract syntax trees* (ASTs) that all programming language parsers construct internally. When a compiler parses $1 + 3 \times 4$, the first thing it does is build the tree:

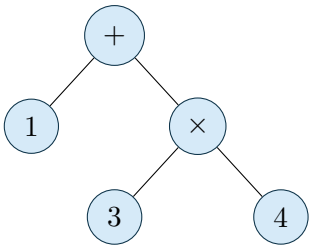

A Spherepop diagram is this same tree, but rendered spatially: each internal node becomes a bubble enclosing its children. The tree structure is the same; only the rendering changes.

This observation has a deep implication: *every programming language with well-defined operator precedence already implicitly uses Spherepop evaluation*. The parser builds the tree; the evaluator collapses it depth-first. Spherepop makes this hidden structure visible.

> ⋆ **Remark**
>
> The relationship between Spherepop and conventional notation is exactly the relationship between a subway map and a street map. The street map shows the geography; the subway map shows the structure. Neither is more correct. They serve different cognitive purposes. Conventional notation is optimized for writing linearly (a typewriter constraint inherited from print). Spherepop is optimized for visual understanding of structure.

3.8 Spherepop Beyond Arithmetic

The Spherepop formalism extends naturally beyond arithmetic to any domain organized by containment and evaluation.

- **Logic:** propositions are bubbles; logical connectives are operators; truth evaluation is collapse. The Hasse diagram of Chapter 1 and Appendix D is a Spherepop structure over the Boolean lattice.
- **Type theory:** types are constraint boundaries; terms inhabit the interior; type-checking is evaluating whether a term pops to an admissible value.
- **Grammar:** syntactic constituents are bubbles; grammatical rules are operators; parsing is the collapse of a word sequence to a phrase structure tree.

- **Biology:** cells are bubbles containing organelles; organisms are bubbles containing cells; ecosystems are bubbles containing organisms. Metabolism is evaluation; death is collapse to a terminal state.
- **Cosmology:** the universe in the RSVP framework is an accessibility field; structures (galaxies, stars, planets, minds) are nested pockets of concentrated density; evolution of the universe is the progressive collapse of high-entropy regions into stable low-entropy structures.

Conceptual Aside: The Universality of Nested Evaluation

The claim that Spherepop generalizes to all these domains is not a metaphor. It is a precise mathematical claim: all these systems are constraint spaces (X, A, κ) with nesting sequences and collapse maps $\mathcal{K}$. The formal apparatus of Appendix C applies to all of them.

What varies between domains is not the mathematics but the *interpretation*: what counts as a bubble, what counts as an operator, what counts as a pop, and what the admissible region A is. The structure is universal; the semantics are domain-specific.

This is a general principle in mathematics: the same formal structure appears in radically different domains because those domains are all special cases of the same underlying abstraction. Group theory, topology, category theory — each was discovered in a specific context and turned out to be universal. Spherepop is, we argue, a similar discovery: the formal structure of nested evaluation, found first in arithmetic, is universal.

Exercises

Exercise

Draw the Spherepop diagram for each of the following expressions. Then evaluate each by performing the pops in order, showing the diagram after each pop.

(a) $(2 + 3) \times (4 - 1)$

(b) $2^{(3^2)}$

(c) $\sqrt{(3^2 + 4^2)}$

Exercise

A Spherepop diagram with n poppable bubbles requires exactly n pops to fully evaluate. Prove this. (Hint: show that each pop removes exactly one internal node

from the AST.)

Exercise

Formalize the claim that "inner bubbles evaluate first" is the unique reading convention consistent with compositional semantics. Specifically: define *compositional semantics* for a Spherepop diagram, and then prove that any reading order other than inside-out produces undefined behavior for some diagram.

Extension

Extend the Spherepop formalism to handle *infinite* nesting sequences — diagrams where some bubble contains infinitely many sub-bubbles. What additional conditions are needed to guarantee that evaluation terminates? Give an example of an infinite Spherepop diagram that evaluates and one that does not.

4

Canonicalization and Equivalence

Two paths that arrive at the same place
are equivalent as routes
but not as experiences.
— Flyxion, *Semantic Infrastructure*

The previous three chapters established the foundational primitives: accessibility (Chapter 1), containment (Chapter 2), and collapse (Chapter 3). This chapter addresses a subtler question: when are two different expressions, gestures, or trajectories the *same thing*?

See App. A §A.4 on equivalence relations; App. F on gesture canonicalization

Sameness is not as simple as it appears. Two arithmetic expressions may look different yet compute the same value. Two hand trajectories may take different paths yet produce the same letter. Two scientific theories may use different formalisms yet make the same predictions. In each case, a *canonicalization* procedure identifies the equivalence class to which an object belongs — the unique representative of all the ways of being the same thing.

4.1 Why Different Trajectories Represent the Same Object

Consider the number 12. It can be represented as:

$$12, \quad 3 \times 4, \quad 2^2 \times 3, \quad 144/12, \quad 13 - 1, \quad \sum_{k=1}^{3} k \cdot (5 - k), \quad \ldots$$

These are not twelve different numbers. They are twelve different *trajectories* to the same number. The number 12 is the equivalence class of all arithmetic expressions that evaluate to 12.

This observation, once made, reveals that the conventional picture of mathematics as a study of objects is misleading. Mathematics is primarily a study of *equivalence classes of trajectories*. Numbers are not primitive objects; they are the fixed points of evaluation

processes.

Definition 4.1: Semantic Equivalence

Two expressions $e_1, e_2 \in \mathcal{E}$ are *semantically equivalent*, written $e_1 \equiv e_2$, if $\mathrm{val}(e_1) = \mathrm{val}(e_2)$. The *equivalence class* of e under $\equiv$ is $[e]_\equiv = \{e' \in \mathcal{E} : e' \equiv e\}$.

The key insight is that semantics — the mathematical concept of *what something means* — is the study of these equivalence classes. Two expressions have the same meaning precisely when they belong to the same equivalence class. Meaning is the quotient of syntax by equivalence.

4.2 Gesture Equivalence

The situation in gesture recognition is richer and more subtle than in arithmetic, because gesture equivalence is not a sharp mathematical relation — it is a *graded* one.

Definition 4.2: Motor Equivalence Class

Two gesture trajectories $\gamma_1, \gamma_2 \in \mathcal{G}$ are *motor-equivalent*, written $\gamma_1 \sim_m \gamma_2$, if they would be recognized as the same gesture by a competent observer under normal conditions. The *motor equivalence class* $[\gamma]_m$ is the set of all trajectories equivalent to γ.

The condition "by a competent observer under normal conditions" hides considerable complexity. What counts as equivalent varies by context, by the observer's expertise, by the ambient conditions (noise, urgency, modality). Gesture equivalence is therefore not a fixed mathematical relation but a *family* of relations parametrized by context.

> ⋆ **Remark**
>
> This contextual dependence is not a defect in the theory — it is the theory's most important feature. The same physical motion can be classified as the letter "A" in English handwriting, as the number "4" in another script, as a greeting gesture in yet another context. The gesture does not have an intrinsic meaning independent of context; it has meaning relative to a classification system. This is precisely the fiber-bundle structure: the same base point (physical motion) sits in different fibers depending on which projection (classification system) is applied.

4.3 Typing Equivalence

Typing provides a particularly clean example of motor equivalence, because the output space is discrete: every sequence of motor acts either produces a valid character or it does not. This discreteness makes the equivalence classes sharply defined.

Example

The character "a" on a standard keyboard can be produced by:

- pressing the `A` key with the left pinky finger,
- pressing it with the left ring finger (awkward but possible),
- using an autocorrect expansion from "aa" to "a",
- pasting from clipboard containing "a",
- using a macro that types "a".

All five trajectories produce the same output character. They are motor-equivalent in the sense of producing identical symbolic output, but they are *kinematically* very different: different fingers, different hand positions, different motor programs, different cognitive loads. The symbolic output "a" is the quotient that throws away all this kinematic variation.

The Gesture Before Symbol thesis (Chapter 10) argues that this throwing-away is problematic. The kinematic variation that the discrete output discards contains real information — about the typist's skill, emotional state, attention, familiarity with the text, even identity (keystroke dynamics are a biometric). Recognizing the equivalence class as a quotient makes this information loss explicit and recoverable in principle.

4.4 Mathematical Equivalence Classes

The notion of equivalence class is one of the most powerful tools in mathematics precisely because it makes the concept of "sameness" rigorous.

Definition 4.3: Quotient Set

Given a set X and an equivalence relation $\sim$ on X, the *quotient set* $X/\sim$ is the set of equivalence classes:

$$X/\sim \;=\; \{[x]_\sim \,:\, x \in X\}$$

The *projection* $\pi : X \to X/\sim$ sends $x \mapsto [x]_\sim$.

The quotient construction appears throughout mathematics whenever we want to identify objects that "look different but are the same." A few examples:

- **Rational numbers:** $\mathbb{Q} = \mathbb{Z}^2/\sim$ where $(p, q) \sim (p', q')$ iff $pq' = p'q$. The fraction $\frac{2}{3}$ and $\frac{4}{6}$ are the same rational number — they are in the same equivalence class.
- **Topological spaces up to homeomorphism:** two topological spaces are equivalent if there is a continuous bijection between them with continuous inverse. The equivalence classes are topological types: a coffee mug and a donut are in the same class (both have genus 1).
- **Programs up to observational equivalence:** two programs are equivalent if they produce the same output for every input. This is the appropriate equivalence for program optimization.
- **Scientific theories up to empirical equivalence:** two theories are equivalent if they make the same predictions for all observable quantities. Underdetermination of theory by evidence is the non-triviality of this equivalence relation.

In each case, the quotient set captures the *intrinsic* structure while discarding irrelevant *representational* variation.

4.5 Canonical Forms

For practical computation, it is useful to pick a single distinguished representative from each equivalence class. This representative is the *canonical form*.

Definition 4.4: Canonical Form

A *canonicalization function* for an equivalence relation $\sim$ on X is a function $c : X \to X$ satisfying:

1. **Idempotence:** $c(c(x)) = c(x)$ for all $x \in X$.
2. **Equivalence-preservation:** $x \sim y \Leftrightarrow c(x) = c(y)$.

The *canonical form* of x is $c(x)$.

The idempotence condition says: applying canonicalization twice is the same as applying it once. Once something is canonical, it stays canonical. This is the mathematical version of "already in simplest form."

Example

For arithmetic expressions over integers: $c(3 \times 4) = c(2^2 \times 3) = c(12) = 12$. The canonical form is the fully evaluated integer. Evaluation is canonicalization.

Example

For fractions: $c(p/q) = p'/q'$ where $\gcd(p', q') = 1$ and $q' > 0$. The canonical form is the reduced fraction in lowest terms.

Example

For polynomials: $c(p)$ = coefficients written in decreasing degree with zero coefficients suppressed. The canonical form is the standard polynomial representation.

Theorem 4.1: Canonical Forms Classify

If $c : X \to X$ is a canonicalization function for $\sim$, then $X/\sim \cong c(X)$ (as sets). That is, the equivalence classes are in bijection with the canonical forms.

Proof. Define $\phi : X/\sim \to c(X)$ by $\phi([x]) = c(x)$. This is well-defined: if $x \sim y$ then $c(x) = c(y)$ by equivalence-preservation. It is injective: if $c(x) = c(y)$ then $x \sim y$ (by the same property), so $[x] = [y]$. It is surjective: for any $z \in c(X)$, $z = c(x)$ for some x, and $\phi([x]) = c(x) = c(c(x)) = c(z) = z$ by idempotence. ■

4.6 Fiber and Projection Viewpoints

The quotient construction has a dual interpretation in terms of fibers and projections, which is often geometrically illuminating.

Definition 4.5: Fiber of a Canonical Form

Given a canonicalization $c : X \to X$, the *fiber* over a canonical form $z \in c(X)$ is

$$c^{-1}(z) = \{x \in X : c(x) = z\}$$

— the set of all expressions that canonicalize to z.

The fiber $c^{-1}(12)$ contains all arithmetic expressions that evaluate to 12. The fiber $c^{-1}(\text{"a"})$ contains all motor sequences that produce the character "a". The fiber is the *extension* of the canonical form: all the ways of being that thing.

The fiber viewpoint makes the information-loss interpretation of canonicalization explicit (cf. Appendix B). The canonical form retains only the equivalence class membership; the fiber contains all the additional information that was discarded.

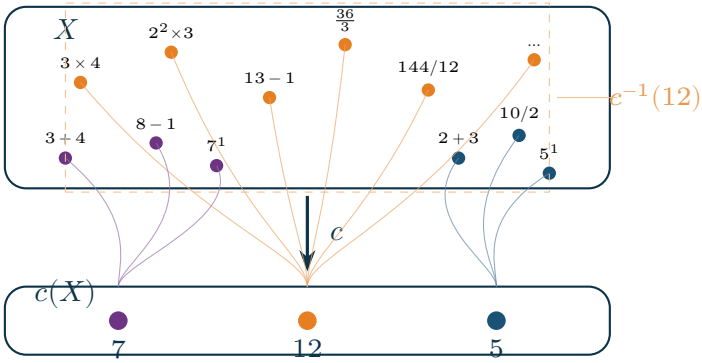

Figure 4.1. Fiber and projection geometry. The expression space X (top) contains many expressions that canonicalize to the same value in $c(X)$ (bottom). The projection c collapses each fiber to a point. The fiber over the canonical form $z = 12$ contains all expressions that evaluate to 12: (3×4), $(2^2 \times 3)$, $(13 - 1)$, and infinitely many others.

4.7 Canonicalization in the RSVP Framework

Within RSVP, canonicalization has a field-theoretic interpretation. The accessibility entropy S measures the volume of admissible futures. A canonical form is a state of locally *minimal* entropy within its equivalence class — the state that has already collapsed as much variation as possible.

Definition 4.6: RSVP Canonical State

A state $x \in X$ is *RSVP-canonical* within its equivalence class $[x]_\sim$ if it minimizes the constraint violation functional κ and is a local minimum of accessible future volume variation:

$$x_{\text{can}} = \arg\min_{y \sim x} \kappa(y).$$

Under accessibility relaxation dynamics (Appendix J), all trajectories within an equivalence class converge to the canonical representative. The dynamics enforce canonicalization automatically: given enough time, equivalent states converge to their shared canonical form.

> ⋆ **Remark**
>
> This is why stable structures persist. A galaxy, an organism, a crystal, a mathematical concept — all are RSVP-canonical states: local minima of constraint violation within the equivalence class of states with similar accessibility properties. They persist not because they are special objects, but because they are the attractors of the canonicalization dynamics.

4.8 The Canonicalization Principle

The various forms of canonicalization discussed in this chapter — arithmetic evaluation, gesture recognition, typing, mathematical reduction, RSVP relaxation — are all instances of a single principle:

The Canonicalization Principle

Any system organized by equivalence classes has a natural dynamics: the motion of equivalent states toward their shared canonical representative. Stable structures are the canonical representatives of their equivalence class under the ambient dynamics.

This principle connects the first four chapters into a single coherent picture. Objects (Chapter 1) are equivalence classes of accessible trajectories. Boundaries (Chapter 2) define the admissible region within which canonical forms reside. Collapse (Chapter 3) is the mechanism by which equivalence classes are reduced to their representatives. Canonicalization (this chapter) is the principle that unifies the three: the persistent structure that remains when collapse is complete.

Exercises

Exercise

Let $X = \{\text{all finite arithmetic expressions over } \mathbb{Z}\}$ with $e_1 \equiv e_2$ iff they evaluate to the same integer. Show that $\equiv$ is an equivalence relation. Describe the canonicalization function c and verify that it satisfies idempotence and equivalence-preservation.

Exercise

The rational numbers $\mathbb{Q}$ are defined as the quotient $(\mathbb{Z} \times \mathbb{Z}^*)/\sim$ where $(p, q) \sim (p', q')$ iff $pq' = p'q$. Verify that $\sim$ is an equivalence relation. Define the canonical form for fractions (reduced form). Show that every equivalence class has exactly one canonical representative.

Exercise

In the RSVP framework, accessibility entropy $S(x) = \log \Omega(x)$ measures future volume. Argue (informally) why two states in the same equivalence class —

making the same predictions for all observables — should have the same S value. Under what circumstances might they have different S values?

Open problem

Define a notion of *canonical gesture* for handwriting that is consistent with the motor equivalence relation $\sim_m$. What properties should the canonical representative of $[\gamma]_m$ have? (Consider: minimum energy, minimum duration, maximum robustness to perturbation.) Are these criteria consistent with each other? If not, which should take precedence and why?

Part II

Spherepop Calculus

5

Basic Syntax

A notation system is a theory of what matters.
What you can write, you can think.
What you cannot write, you must think around.
— Flyxion, *Semantic Infrastructure*

Part I established the conceptual foundations: accessibility, containment, collapse, and canonicalization. Part II develops the Spherepop calculus as a formal system. This chapter defines the syntax — the rules for forming well-formed Spherepop expressions — before moving to dynamics (evaluation) in Chapter 6, geometry (expression space) in Chapter 7, semantics (renormalization) in Chapter 8, and action histories in Chapter 9.

App. C §C.2 for formal expression trees

5.1 Spheres

The fundamental syntactic unit of Spherepop is the *sphere* — a closed region that may contain other spheres or atomic content.

Definition 5.1: Sphere

A *sphere* is a pair $\langle L, C \rangle$ where:

- L is a *label* drawn from an alphabet Σ_L (operators, connectives, binders),
- $C = [c_1, \dots, c_n]$ is an ordered list of *contents*, each of which is either an atom or a sphere.

A sphere with no contents is *atomic* and written simply $\langle L \rangle$.

Atoms are the terminal symbols: numbers, variables, constants, truth values. Non-atomic spheres are the compound expressions: they carry an operator label and contain argument spheres.

5.2 Containment

The containment relation in Spherepop syntax mirrors the spatial containment of Chapter 2 exactly.

Definition 5.2: Direct Containment

Sphere s' is *directly contained* in sphere s, written $s' \prec s$, if s' appears in the content list of s. The *containment relation* $\prec^*$ is the transitive closure of $\prec$.

Definition 5.3: Depth

The *depth* $d(s)$ of a sphere s in a Spherepop expression E is the number of spheres that properly contain s in E:

$$d(s) = |\{s' : s \prec^* s' \text{ and } s' \neq s\}|.$$

The *outermost* sphere has depth 0; spheres one level in have depth 1; and so on.

5.3 Operators

Spherepop is parametric in the operator set. Different instantiations choose different alphabets.

Definition 5.4: Operator Signature

An *operator signature* is a pair (Σ_L, ar) where Σ_L is a set of labels and $\mathrm{ar} : \Sigma_L \to \mathbb{N} \cup \{\omega\}$ assigns an *arity* to each label. A sphere $\langle L, C\rangle$ is *well-formed* if $|C| = \mathrm{ar}(L)$ (or $|C|$ is arbitrary if $\mathrm{ar}(L) = \omega$).

Standard arithmetic uses binary operators $\{+, -, \times, \div, \uparrow\}$ with arity 2, and unary operators $\{-, \sqrt{\cdot}\}$ with arity 1. Spherepop logic uses $\{\wedge, \vee, \neg, \to\}$ with arities $\{2, 2, 1, 2\}$.

5.4 Reading Conventions

A Spherepop expression is read in *inside-out order*: innermost spheres are evaluated first, outermost last. Within a single sphere, contents are processed left-to-right. This gives a canonical traversal order: a post-order depth-first traversal of the expression tree.

Definition 5.5: Canonical Traversal

The *canonical traversal* $\tau(E)$ of a Spherepop expression E is the post-order sequence of sphere labels encountered in a depth-first left-to-right traversal of E's expression tree.

Example

For $E = \langle +, [\langle 1\rangle, \langle \times, [\langle 3\rangle, \langle \uparrow, [\langle 2\rangle, \langle 2\rangle]\rangle]\rangle]\rangle$, the canonical traversal is: $1, 3, 2, 2, \uparrow, \times, +$. This is precisely the reverse Polish (postfix) notation for the expression $1 + 3 \times 2^2$.

5.5 Bracket Notation

For linear typesetting, Spherepop expressions are written in bracket notation: nested angle brackets replace the spatial bubbles.

Definition 5.6: Bracket Notation

The *bracket notation* of a sphere $\langle L, [c_1, \dots, c_n]\rangle$ is the string $\langle L : c_1, \dots, c_n\rangle$. Atomic spheres $\langle L\rangle$ are written as just L.

Example

The expression $1 + 3 \times 2^2$ in bracket notation:

$$\langle + : 1,\ \langle \times : 3,\ \langle \uparrow : 2,\ 2\rangle\rangle\rangle$$

The nesting is explicit; no precedence rules are needed.

5.6 Translation Between Symbolic and Spherepop Forms

Every conventional mathematical expression translates to a unique Spherepop expression via the following algorithm.

Definition 5.7: Symbolic-to-Spherepop Translation

Given a conventional expression E_{sym}:

1. Parse E_{sym} into its abstract syntax tree T using standard precedence and associativity rules.
2. Replace each internal node labeled L with children $c_1, \dots, c_n$ by the sphere

$\langle L, [c_1, \ldots, c_n] \rangle$.

3. Replace each leaf labeled a by the atomic sphere $\langle a \rangle$.

The result E_{sp} is the unique Spherepop form of E_{sym}.

The translation is unique because the AST is unique (given fixed precedence and associativity conventions). Different conventional notations for the same tree produce the same Spherepop form.

Exercise

Translate the following into bracket notation and draw the Spherepop diagram. Identify the depth of each sub-sphere.

(a) $(a + b)(a - b)$

(b) $\neg(p \wedge q) \to (\neg p \vee \neg q)$

(c) $\int_0^\infty e^{-x^2}\, dx$ (treat $\int$, e, and ^{2} as operators with appropriate arities)

Exercise

Show that the canonical traversal $\tau(E)$ of any Spherepop expression E is a valid postfix (reverse Polish) encoding of E. Describe a stack machine that evaluates $\tau(E)$ directly.

Design

Design a Spherepop operator signature for propositional modal logic, adding operators $\Box$ (necessity, arity 1) and $\Diamond$ (possibility, arity 1). What is the Spherepop form of the formula $\Box p \to \Diamond p$? How does the spatial representation make the scope of modal operators visually clear?

6

Evaluation Dynamics

Evaluation is not search.
It is descent along a gradient
that was always already there.
— Flyxion, *Semantic Infrastructure*

Chapter 5 defined the static syntax of Spherepop. This chapter defines the dynamics: how expressions change over time as they are evaluated.

App. C §C.6–C.10 for formal proofs of termination and confluence

6.1 The Pop Operation

The atomic unit of dynamics is the pop.

Definition 6.1: Redex

A sphere $s = \langle L, [c_1, \dots, c_n] \rangle$ in expression E is a *redex* (reducible expression) if:

1. All contents c_i are atomic (no content sphere contains further spheres), and
2. The operator L is defined on the values of $c_1, \dots, c_n$.

A redex is the innermost sphere ready to pop.

Definition 6.2: Pop Step

A *pop step* replaces a redex $s = \langle L, [c_1, \dots, c_n] \rangle$ with the atomic sphere $\langle L(c_1, \dots, c_n) \rangle$, where $L(c_1, \dots, c_n)$ is the result of applying operator L to the atomic values. We write $E \to_{\text{pop}} E'$ when E' is obtained from E by one pop step.

6.2 Refusal

Not every innermost sphere can pop. Refusal is suspended evaluation.

Definition 6.3: Refusal

A sphere s *refuses* when:

1. **Variable refusal:** s contains a free variable (unbound symbol). s cannot pop until the variable is bound.
2. **Domain refusal:** s's operator is undefined on its current arguments (e.g., division by zero, $\sqrt{-1}$ in real arithmetic). s cannot pop until the arguments are modified.
3. **Protection:** s carries a protection marker that prevents popping regardless of content.

A refusing sphere is written $\perp_{\mathrm{sp}\, s}$, with subscript indicating the reason.

⋆ **Remark**

Refusal models lazy evaluation, closures, suspended computations, and blocked threads. A refusing sphere is not an error — it is a sphere waiting for its preconditions to be satisfied. Many functional programming patterns (promises, futures, generators) are formalized by refusal and the subsequent binding that resolves it.

6.3 Binding

Definition 6.4: Binding Step

A *binding step* assigns a value v to a free variable x throughout an expression E, written $E[x := v]$. After binding, any sphere that was refusing due to x may become a redex.

Example

The sphere $\langle +, [x, \langle 3 \rangle] \rangle$ refuses because x is free. After binding $x := 5$, it becomes $\langle +, [\langle 5 \rangle, \langle 3 \rangle] \rangle$, which is a redex that pops to $\langle 8 \rangle$.

6.4 Collapse Operators

⋆ **Remark**

The Spherepop operators in quantum context. The four operators Pop, Bind, Collapse, and Refuse acquire a striking interpretation when applied to quantum measurement (the HYDRA/Spherepop connection):

- **Pop (Create):** an irreversible quantum event — the moment a photon strikes a detector, puncturing the continuous wavefunction with a discrete, permanent fact.
- **Bind (Join):** correlation of two compatible quantum events into a joint structure. The beginning of quantum geometry.
- **Collapse (Identify):** grouping different causal histories that lead to the same macroscopic outcome — the many paths that produce the same measurement result.
- **Refuse (Filter):** the topological filter that the RSVP entropy field applies: any cluster of events that exceeds the available trajectory volume, or that contradicts the vector flow field, is simply refused. This is the dynamical mechanism that replaces the Born rule — rather than an appended postulate, measurement collapse follows from the geometry of the accessibility landscape refusing inconsistent branches.

In this reading, Schrödinger's equation is not the foundation of quantum mechanics but its continuum limit: the smooth approximation valid between irreversible events. The events (Pops) are primary; the wavefunction is their residue.

Beyond individual pops, Spherepop supports compound operations that collapse multiple levels simultaneously.

Definition 6.5: Collapse Operator

A *collapse operator* $\downarrow k$ applied to an expression E performs k pop steps simultaneously, collapsing the k deepest levels. Formally:

$$\downarrow k(E) = E' \text{ where } E \to^{k}_{\text{pop}} E'.$$

Collapse operators are useful for describing batch evaluation — the behavior of a compiler that reduces an entire expression in one pass rather than step by step.

Definition 6.6: Full Collapse

The *full collapse* $\downarrow\infty(E)$ is the unique terminal expression reachable from E by exhaustive popping (if it exists).

6.5 Reduction Sequences

Definition 6.7: Reduction Sequence

A *reduction sequence* from E is a (possibly infinite) sequence

$$E = E_0 \to_{\text{pop}} E_1 \to_{\text{pop}} E_2 \to_{\text{pop}} \cdots$$

of pop steps. A reduction sequence *terminates* at E_n if E_n contains no redexes.

Theorem 6.1: Termination for Arithmetic

Every finite, ground (variable-free), well-typed arithmetic Spherepop expression has a terminating reduction sequence.

Proof. By strong induction on the depth $d(E)$. If $d(E) = 0$, E is atomic and already terminal. If $d(E) \geq 1$, some innermost sphere s is a redex (since E is ground and well-typed). Popping s strictly reduces the number of non-atomic spheres. Since this count is non-negative and integer-valued, the sequence terminates. ■

6.6 Termination Conditions

The termination theorem above requires three conditions that are worth examining:

- **Finite:** infinite Spherepop diagrams (co-recursive expressions) may not terminate. Streams, infinite lists, and co-inductive data types require lazy evaluation and controlled refusal.
- **Ground:** free variables cause refusal. A variable-free expression has no refusing spheres (assuming well-typedness) and must terminate.
- **Well-typed:** domain refusal (division by zero, etc.) can prevent termination even in ground expressions. Type safety rules out domain errors statically.

The interaction of these three conditions defines the boundary between *total* computation (always terminates) and *partial* computation (may not terminate). The Halting Problem

is precisely the question of which Spherepop expressions have terminating reduction sequences — a question that is undecidable in general.

6.7 Confluence

A key property of Spherepop evaluation is that the choice of which redex to pop first does not affect the final result.

Theorem 6.2: Confluence

For any Spherepop expression E over a confluent operator set (one where all operators are deterministic and total on their domain), any two reduction sequences from E reach the same terminal expression.

Proof. [Sketch] Any two redexes in E are either nested (one is inside the other) or disjoint (neither contains the other). If nested, the outer redex depends on the inner, so they cannot both be redexes simultaneously — the outer will only become a redex after the inner pops. If disjoint, popping either one does not affect the other, so their pops commute. By the Church–Rosser property for disjoint reductions, all sequences reach the same terminal. ■

Confluence means evaluation is *deterministic in result* even when it is *non-deterministic in strategy*. Different evaluation orders may take different numbers of steps, but they always arrive at the same place.

Exercise

Give an example of a Spherepop expression with two distinct redexes that can be popped in either order. Show that both orders reach the same terminal expression, verifying confluence in this case.

Exercise

Define a Spherepop expression that refuses due to each of the three reasons (variable, domain, protection). For each, describe what additional step would resolve the refusal and allow evaluation to continue.

Harder

Construct a Spherepop expression that does not terminate. (Hint: consider an operator that expands its arguments rather than reducing them — analogous to the Ω combinator in the λ-calculus.) What happens to the depth of the expression

as evaluation proceeds?

7

Geometry of Expressions

An expression is not a string.
It is a shape in a space of shapes.
— Flyxion, *Semantic Infrastructure*

The previous two chapters treated Spherepop syntactically (Chapter 5) and dynamically (Chapter 6). This chapter treats Spherepop *geometrically*: expressions as points in a metric space, evaluation as motion through that space, and the structure of computation as the topology of reachable expression sets.

Connects to App. E on hyper-cubes as expression spaces

7.1 Expressions as Topological Objects

A Spherepop expression is not merely a syntactic object — it is a topological object with a natural metric. Two expressions are close if they differ in few places; distant if they differ substantially.

Definition 7.1: Edit Distance

The *edit distance* $d(E_1, E_2)$ between two Spherepop expressions is the minimum number of atomic operations (insert a sphere, delete a sphere, change a label) needed to transform E_1 into E_2.

The set of all Spherepop expressions over a fixed signature, equipped with edit distance, forms a metric space $(\mathcal{E}, d)$. Evaluation defines a trajectory through this space:

$$E_0 \xrightarrow{\text{pop}} E_1 \xrightarrow{\text{pop}} \cdots \xrightarrow{\text{pop}} E_n.$$

7.2 Nesting Depth as a Geometric Quantity

Depth is the primary geometric invariant of a Spherepop expression. It measures the maximum containment level — the "height" of the expression in the nesting hierarchy.

Definition 7.2: Expression Depth Profile

The *depth profile* of an expression E is the function $\delta_E : \text{nodes}(E) \to \mathbb{N}$ assigning depth to each sphere node. The *maximum depth* is $D(E) = \max_s \delta_E(s)$.

Proposition 7.1: Depth Decreases Under Evaluation

If $E \to_{\text{pop}} E'$, then $D(E') \leq D(E)$, with equality only when the popped redex was not the deepest sphere in E.

The depth profile describes the "shape" of an expression geometrically: a tall, narrow expression has high maximum depth and few wide branches; a flat, wide expression has low maximum depth and many branches at each level.

7.3 Constraint Shells

From the perspective of Chapters 1–2, a Spherepop expression is a system of nested constraint shells.

Definition 7.3: Constraint Shell

The *constraint shell* at depth k in expression E is the set of spheres at depth exactly k. The innermost shell (maximum depth $D(E)$) contains the redexes; the outermost shell (depth 0) contains the root.

Each shell constrains the evaluation of spheres in all deeper shells: the operator at depth k cannot apply until all depth-$k+1$ spheres in its content list have been evaluated. The constraint structure is therefore hierarchical — a tower of constraints, one per depth level.

7.4 Evaluation Paths

An evaluation path is a sequence of expressions from an initial expression to its terminal form. The geometry of evaluation paths reveals the structure of the computation.

Definition 7.4: Evaluation Path Length

The *length* of an evaluation path from E to E' is the number of pop steps. The *shortest evaluation path* minimizes the number of steps.

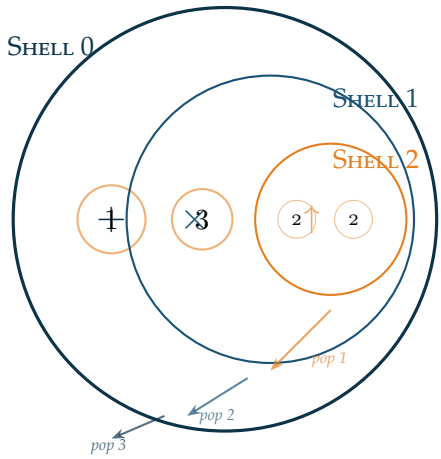

Figure 7.1. Constraint shells in the Spherepop expression $1 + (3 \times (2 \uparrow 2))$. Shell 0 (outermost, depth 0) contains the $+$ operator. Shell 1 contains $\times$. Shell 2 (innermost) contains $\uparrow$ and the atoms $2, 2$. Evaluation proceeds shell 2 $\to$ shell 1 $\to$ shell 0.

Proposition 7.2: Shortest Path Bound

The length of the shortest evaluation path from E to its terminal form equals the number of non-atomic spheres in E.

Proof. Each pop step eliminates exactly one non-atomic sphere (replacing it with an atomic value). Since each step reduces the non-atomic count by exactly 1, and no step can be skipped in a valid evaluation, the minimum path length equals the initial number of non-atomic spheres. ■

7.5 The Expression Manifold

At a higher level, the set of all expressions of a given depth and operator signature forms an *expression manifold*: a structured space in which the geometry of evaluation can be studied globally.

Definition 7.5: Expression Manifold

For a fixed operator signature (Σ_L, ar) and maximum depth D, the *expression manifold* $\mathcal{M}(D)$ is the metric space of all well-formed expressions of depth $\leq D$, equipped with edit distance d.

Evaluation defines a vector field on $\mathcal{M}(D)$: at each expression E, the "pop vector" points in the direction of E's reduction (toward the terminal expression). The integral curves of this vector field are the evaluation paths.

> ⋆ **Remark**
>
> This makes the connection to RSVP explicit. In RSVP, the vector field $\mathbf{v}$ drives the evolution of the scalar field Φ. In the expression manifold, the pop vector drives the evolution of the expression. Spherepop evaluation *is* a special case of RSVP dynamics restricted to the discrete expression manifold.

7.6 Visualization Techniques

Several visualization techniques help make expression geometry tangible:

1. **Depth coloring:** color each sphere by depth, from cool colors at depth 0 to warm colors at maximum depth. The resulting image shows the thermal structure of the computation, with the "hot" innermost regions evaluating first.
2. **Evaluation animation:** animate the sequence of pop steps, showing each sphere collapse in turn. The animation makes the propagation of values outward through the expression directly visible.
3. **Expression tree as landscape:** embed the expression tree in 3D with depth as height. The landscape metaphor makes evaluation a physical process: water flowing downhill, filling valleys, eventually settling at the global minimum (the terminal expression at depth 0).
4. **Constraint hypercube projection:** encode each expression of depth $\leq D$ as a binary vector of length $|\mathcal{M}(D)|$ (one bit per possible sub-sphere, indicating presence or absence). The expression manifold embeds in the hypercube Q_n from Appendix E, and evaluation corresponds to motion toward a designated corner.

Exercise

Draw the expression tree for $(2+3) \times (4+1)$ as a 3D landscape with depth as height. Identify the "valleys" (innermost spheres) and describe the evaluation process as water flowing to sea level.

Exercise

Two expressions E_1 and E_2 have the same depth profile if $\delta_{E_1} = \delta_{E_2}$ up to relabeling. Define an equivalence relation $\sim_{\text{shape}}$ on expressions that identifies expressions with the same shape. What does $\mathcal{E}/\sim_{\text{shape}}$ look like? How many shape classes are there for depth ≤ 2 with binary operators?

Harder

Define a notion of *expression curvature* that measures how "unbalanced" an expression tree is (i.e., the degree to which the depth profile is skewed to one side). Show that a perfectly balanced binary expression tree of depth D has curvature 0, and that a completely left-leaning tree (every left child is a subtree, every right child is an atom) has maximum curvature for its depth.

8

Semantic Renormalization

To understand is to forget the details
while preserving the structure.
Understanding is renormalization.
— Flyxion, *Semantic Infrastructure*

The previous chapters treated evaluation as reduction: each pop step removes one sphere, decreasing depth and complexity. This chapter examines evaluation from the opposite direction — not as *destruction* of structure but as *transformation* of structure. The relevant concept is renormalization.

Renormalization in physics: Wilson, 1971; in logic: proof normalization

8.1 The Collapse Operator Revisited

In physics, renormalization is a procedure for handling theories with infinitely many degrees of freedom by systematically integrating out short-distance behavior and replacing it with effective parameters. The key insight is that the result at long distances does not depend on the microscopic details — only on certain aggregate properties (coupling constants, anomalous dimensions) that survive the integration.

Spherepop evaluation has an identical structure.

Definition 8.1: Spherepop Renormalization

A *Spherepop renormalization step* at depth k collapses all spheres at depth k simultaneously, replacing each with its evaluated value. The result is an expression of depth $k - 1$ in which the depth-k details have been integrated out.

The depth-k details (the specific sub-expressions that were collapsed) are gone after renormalization. Only their effective values — the atoms that replaced them — survive. The long-distance (low-depth) structure of the expression is unaffected.

8.2 Compression

Renormalization produces *compression*: a shorter, simpler expression that computes the same thing as the original.

Definition 8.2: Semantic Compression

An expression E' is a *semantic compression* of E if:

1. $E' \equiv E$ (semantically equivalent: same terminal value),
2. $D(E') < D(E)$ or $|E'| < |E|$ (strictly simpler).

Every pop step is a semantic compression: the result has fewer spheres and lower depth, but the same value. Full evaluation is maximal compression: the terminal atomic sphere is the most compressed form possible.

Example

Starting from $E = \langle + : 1, \langle \times : 3, \langle \uparrow : 2, 2 \rangle \rangle \rangle$ (6 spheres, depth 2):

$$\begin{aligned} E &\to_{\text{pop}} \langle + : 1, \langle \times : 3, 4 \rangle \rangle && \text{(5 spheres, depth 1)} \\ &\to_{\text{pop}} \langle + : 1, 12 \rangle && \text{(3 spheres, depth 1)} \\ &\to_{\text{pop}} 13 && \text{(1 sphere, depth 0)} \end{aligned}$$

Three compressions; final form is maximally compressed.

8.3 Abstraction

Renormalization in physics produces *effective theories*: descriptions valid at a given scale that replace the microscopic theory with a coarser but computationally tractable model. Spherepop renormalization produces the same: *abstractions*.

Definition 8.3: Semantic Abstraction

A *semantic abstraction* is a named partial expression: a sphere with a label f that represents a complex sub-expression, without expanding the sub-expression. In bracket notation: f (where f is understood to expand to $\langle + : 1, 12 \rangle$ if needed).

Abstraction is deferred renormalization: we give a name to the result of a sub-computation without performing it. Functions, modules, classes, and APIs are all forms of semantic abstraction — they provide the *interface* of a computation without revealing the *implementation*.

⋆ **Remark**

The power of abstraction lies precisely in what it hides. A function $f(x) = x^2+2x+1$ and a function $g(x) = (x+1)^2$ are semantically equivalent ($f \equiv g$) but structurally different. The abstracted form $h(x) = (x+1)^2$ is more compressed and reveals the structure (a perfect square) that the expanded form hides. Good abstractions choose the compressed representation that makes relevant structure visible while hiding irrelevant detail.

8.4 Quotient Structures

Semantic renormalization produces quotient structures: the set of all expressions, quotiented by semantic equivalence, organized by their compression level.

Definition 8.4: Renormalization Tower

The *renormalization tower* of an expression space $\mathcal{E}$ is the sequence of quotient spaces:

$$\mathcal{E} = \mathcal{E}_0 \twoheadrightarrow \mathcal{E}_1 \twoheadrightarrow \cdots \twoheadrightarrow \mathcal{E}_n$$

where $\mathcal{E}_k$ is the space of expressions of depth $\leq D - k$ (expressions with the first k levels of detail collapsed), and each arrow is a quotient projection.

This tower is the Spherepop version of the renormalization group in physics: a sequence of effective theories, each coarser than the last, each valid at a different scale of detail.

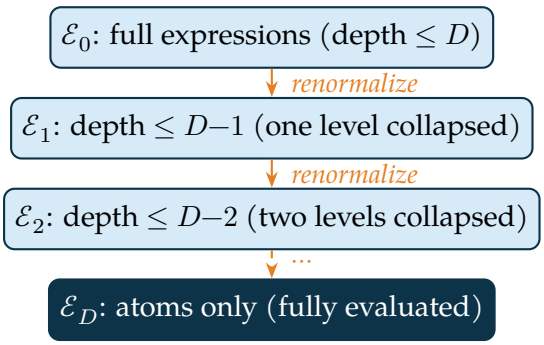

Figure 8.1. The renormalization tower of Spherepop expressions. Each level integrates out one more layer of syntactic detail, replacing it with effective values. The bottom level contains only atoms: fully evaluated, maximally compressed expressions.

8.5 Relationship to Admissibility

Renormalization and admissibility interact through the constraint structure. Each level of the renormalization tower has its own admissibility conditions: what counts as a well-formed expression of depth $\leq k$.

Proposition 8.1: Admissibility is Renormalization-Stable

If E is admissible (satisfies all syntactic and semantic constraints), then any renormalization $R_k(E)$ is also admissible.

Proof. Renormalization replaces each sub-expression with its value. Values are always well-typed atoms. Therefore the renormalized expression satisfies all typing constraints. Semantic constraints (e.g., the result is in the correct domain) are preserved because the value is the actual evaluated result. ■

8.6 Connection to CLIO and Semantic Fields

The renormalization tower provides a natural interpretation for the CLIO (Constraint-Leveraged Inference Optimization) framework (Chapter 15, Appendix H). CLIO uses constraint satisfaction to prune the search space. Renormalization tells us why this works:

Conceptual Aside: Why Renormalization Enables Inference

A naive inference system must consider all possible continuations of a partial expression. This is exponential in the number of open positions.

Renormalization provides a shortcut: instead of exploring all continuations in the full expression space $\mathcal{E}_0$, the system works in the renormalized space $\mathcal{E}_k$ where the fine details have been integrated out. The search space is exponentially smaller.

This is why CLIO — and why human experts — can solve problems that brute-force search cannot. The expert has internalized the renormalization of their domain: they work at the level of abstracted patterns rather than raw details. The patterns are the fixed points of the renormalization flow: the structures that survive repeated compression.

In terms of the RSVP fields: renormalized expressions correspond to states of low κ (constraint violation) and high S (accessibility). The renormalization flow is a gradient flow toward these states.

Exercise

Apply two levels of renormalization to the expression $((2+3)\times(4+1))+((6-1)\times(1+1))$. What expression results? What detail has been integrated out?

Exercise

Define "semantic lossiness" of a renormalization step as $L_k = d(E, R_k(E))$ (edit distance between the original and renormalized expression). Show that L_k is monotonically non-decreasing in k (more renormalization = more lossiness). When is $L_k = 0$?

Algebraic

The renormalization tower is a sequence of surjections $\mathcal{E}_0 \twoheadrightarrow \cdots \twoheadrightarrow \mathcal{E}_D$. Show that this sequence forms an inverse system. What is the inverse limit $\varprojlim \mathcal{E}_k$? (Hint: consider what the inverse limit means in terms of "infinitely detailed" expressions.)

9

Action Histories and Spherepop Dynamics

The present moment is always the consequence
of everything that has already been decided.
Action history is the accumulation of constraint.
— Flyxion, *Semantic Infrastructure*

The previous four chapters developed Spherepop as a static and kinematic system: expressions, their syntax, their evaluation, their geometry, their renormalization. This chapter introduces a dynamic structure that goes deeper: the *action history* of a computation, and the variational principle that governs it.

Connects to decision theory, Lagrangian mechanics, and RSVP action (App. K §K.20)

9.1 The Spherepop Lagrangian

Classical mechanics describes particle trajectories as the extrema of an action functional:

$$\mathcal{S}[\gamma] = \int_0^T L(q, \dot{q})\, dt.$$

The Euler–Lagrange equations then determine which trajectories are physical.

Spherepop evaluation has an analogous structure. Rather than a particle moving through physical space, we have an expression evolving through expression space. Rather than kinetic energy minus potential energy, we have evaluation cost minus structural richness.

Definition 9.1: Spherepop Lagrangian

For a reduction sequence $\sigma = (E_0 \to E_1 \to \cdots \to E_n)$, the *Spherepop Lagrangian* is:

$$L(E_t, \dot{E}_t) = C(E_t) - \lambda \cdot \mathrm{Acc}(E_t)$$

where $C(E_t)$ is the complexity (number of non-atomic spheres), $\mathrm{Acc}(E_t) = \log |\mathcal{A}(E_t)|$ is the accessibility entropy, and $\lambda > 0$ is a tradeoff parameter.

The action of the reduction sequence is:

$$\mathcal{S}[\sigma] = \sum_{t=0}^{n-1} L(E_t, \dot{E}_t).$$

Evaluation minimizes this action: among all sequences reaching the terminal expression, evaluation by the innermost-first (depth-first) strategy minimizes $\mathcal{S}$.

9.2 Action Histories

The concept of an action history extends the variational picture. A computation does not exist only in the present moment — it carries the entire record of how it arrived at its current state.

Definition 9.2: Action History

The *action history* of an expression E_t in a reduction sequence is the sequence of all previous states and pop operations:

$$\mathcal{H}_t = (E_0, p_0, E_1, p_1, \dots, p_{t-1}, E_t)$$

where p_i denotes the pop operation at step i.

The action history is the computational analog of the path integral in quantum mechanics. Just as the quantum amplitude for a particle to reach state x at time T is a sum over all paths from the initial state to x, the "weight" of a computation reaching expression E_t is determined by the action of all paths leading to it.

9.3 Commitment Variables

⋆ **Remark**

The 0.73 Hz loop and action history. Cognitive neuroscience identifies a characteristic frequency near 0.73 Hz in the aggregation of sensory inputs into conscious perception — the rate at which the brain integrates distributed neural activity into a unified temporal snapshot of the present moment. In the action-history

> framework, this loop is the rate of *commitment*: each cycle converts a portion of remaining freedom F_t into committed past Γ_t. The $0.73\,\text{Hz}$ rhythm is the cognitive analogue of the cosmic entropy clock — the rate at which the agent's future collapses into its past, one irreversible snapshot at a time. An agent's "present moment" is the temporal resolution of its commitment cycle, not a physical primitive.

A key concept in action history theory is the *commitment variable*: a choice made at some point in the evaluation that is now fixed and cannot be undone.

Definition 9.3: Commitment Variable

A *commitment* is a pop step p_i in an action history $\mathcal{H}_t$ (with $i < t$). Once committed, the popped sphere is gone — the information it contained has been discarded. The commitment is irreversible. The *commitment set* $\Gamma_t = \{p_0, p_1, \dots, p_{t-1}\}$ is all decisions made up to time t.

The commitment set accumulates throughout evaluation. Early commitments (deep pops) constrain the behavior of later, shallower pops. This is why evaluation order matters for efficiency even when it does not matter for correctness: different evaluation orders make different commitments at different times, and some commitment orders allow subsequent decisions to be made more efficiently.

9.4 Remaining Freedom

The complement of the commitment set is the *remaining freedom*: the set of choices not yet made.

Definition 9.4: Remaining Freedom

The *remaining freedom* at time t in an evaluation sequence is the set of expressions reachable from E_t by some evaluation strategy:

$$\mathcal{F}_t = \{E' : E_t \to^*_{\text{pop}} E'\}.$$

The *freedom measure* is $F_t = |\mathcal{F}_t|$.

Proposition 9.1: Freedom Decreases with Commitment

For any evaluation sequence, $F_{t+1} \leq F_t$.

Proof. $\mathcal{F}_{t+1} \subseteq \mathcal{F}_t$: every expression reachable from E_{t+1} is also reachable from E_t (via the additional pop step $E_t \to E_{t+1}$). But $\mathcal{F}_{t+1}$ may exclude expressions reachable from E_t by a different pop step, so the containment may be strict. ■

This proposition formalizes a profound principle: *computation consumes freedom*. Each pop step irrevocably narrows the future. This is the computational analog of the thermodynamic increase of entropy: the past grows larger; the future shrinks.

9.5 Accessibility Measures

The accessibility measures of Chapter 1 and Appendix J apply directly to evaluation sequences. The accessibility entropy of an expression is the logarithm of its freedom measure:

$$S_t = \log F_t = \log |\mathcal{F}_t|.$$

Proposition 9.2: Accessibility Entropy Decreases Under Evaluation

For any evaluation sequence, $S_{t+1} \leq S_t$.

This is the computational Second Law: evaluation is an irreversible process that consumes accessibility. The initial expression has maximal accessibility (many possible futures); the terminal atom has zero accessibility (no future — computation is complete).

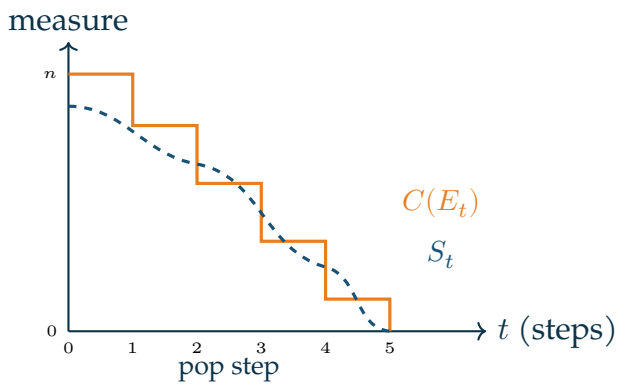

Figure 9.1. Complexity $C(E_t)$ and accessibility entropy S_t as functions of evaluation step t. Both decrease monotonically to zero at the terminal state. C decreases by exactly 1 per step; S decreases more smoothly, capturing the branching structure of the evaluation space.

9.6 Connection to Decision Theory

The action history formalism connects directly to decision theory under uncertainty. Consider a computation where some operators are stochastic: they produce different

outputs with different probabilities. The evaluation then defines a probability tree, and the action history becomes a sample path through this tree.

Definition 9.5: Stochastic Evaluation

A *stochastic Spherepop system* replaces deterministic operators with probability distributions over outputs. The *expected action* of an evaluation strategy π is:

$$\mathbb{E}_\pi[\mathcal{S}] = \sum_\sigma P_\pi(\sigma) \cdot \mathcal{S}[\sigma]$$

where the sum is over all possible reduction sequences σ.

Optimal decision-making — choosing the evaluation strategy π^* that minimizes expected action subject to accessibility constraints — is equivalent to solving a Markov decision process defined on the expression manifold.

9.7 Connection to RSVP

The action history formalism is the bridge between Spherepop and RSVP. In RSVP, the action functional is:

$$\mathcal{S}_{\text{RSVP}}[\Phi, \mathbf{v}, S] = \int \mathcal{L}(\Phi, \mathbf{v}, S)\, d^4x$$

(Appendix K, Definition K.20). The Spherepop Lagrangian $L(E_t)$ is the discrete analog of $\mathcal{L}$:

- Complexity $C(E_t) \leftrightarrow$ scalar density Φ: both measure the concentration of unresolved structure.
- Pop operations $\leftrightarrow$ vector flow $\mathbf{v}$: both describe directed motion through the state space.
- Accessibility entropy $S_t \leftrightarrow$ entropy field S: both measure the volume of available futures.

The RSVP field equations (Appendix K) are the continuous limit of the Spherepop action history: as the expression space becomes continuous and evaluations become infinitesimally small, the discrete action sum $\sum L(E_t)$ becomes the continuous action integral $\int \mathcal{L}\, d^4x$.

Spherepop–RSVP Correspondence

The Spherepop action history formalism is the discrete skeleton of the RSVP field theory. Expressions correspond to field configurations; evaluation sequences cor-

respond to field trajectories; complexity corresponds to scalar density; accessibility corresponds to entropy. The two frameworks are related by a limiting process: RSVP is the continuum limit of Spherepop dynamics.

Exercise

Compute the action $\mathcal{S}[\sigma]$ for the evaluation of $1+(3\times(2\uparrow 2))$, using the Lagrangian $L(E_t) = C(E_t) - S_t$ with $\lambda = 1$. Assume $S_0 = \log 6$, $S_1 = \log 5$, $S_2 = \log 3$, $S_3 = 0$.

Exercise

The freedom measure $F_t = |\mathcal{F}_t|$ measures the number of terminal expressions reachable from E_t. For a deterministic, confluent operator set, show that $F_t = 1$ for all $t \geq 0$. (What does this say about accessibility in fully deterministic computation?)

Open problem

Define an appropriate notion of *Spherepop entropy production*: the rate at which accessibility is consumed per pop step. For which evaluation strategies is entropy production minimal? Does minimal entropy production correspond to any known computational optimization strategy?

Part III

Gesture Before Symbol

10

Gesture as Primary Reality

The hand is already thinking before the symbol appears.
The trace precedes the glyph.
— Flyxion, *Gesture Before Symbol*

We have spent three parts building the formal machinery of constraint spaces, Spherepop collapse, and accessibility landscapes. This chapter turns to the question that prompted all of it: *where does meaning come from?*

See also: Ch. 12 on keyboards as gesture sensors; Ch. 28 on gesture-to-glyph

The answer proposed here is gestural. Meaning does not originate in symbols. Symbols are *compressions* of gestures — stable residues left by repeated motor acts in constrained environments. The symbol "A" is fossilized hand motion. The word "grasp" is a cognitive trace of the act of grasping.

This is not a metaphor. It is, we argue, a claim with formal consequences.

10.1 Developmental Evidence

Historical Note

McNeill's longitudinal studies (McNeill 1992) established that gesture and speech co-originate in development. Children do not learn to gesture and then attach words. Gesture and protolanguage co-emerge from the same motor substrate. This finding was largely ignored by computational linguistics for two decades.

In developmental sequence:

1. **Reach-grasp** trajectories appear at 4–6 months — before any intentional vocalization.
2. **Deictic pointing** emerges at 9–12 months — establishing shared attention before shared reference.
3. **Iconic gestures** appear at 12–18 months, structurally resembling the objects they

indicate.

4. **Symbolic reference** consolidates at 18–24 months — built on a gestural substrate already 12 months old.

The implication is direct: symbolic reference is not the foundation. It is a *late compression* of a richer gestural system.

Definition 10.1: Gestural Substrate

The *gestural substrate* $\mathcal{G}$ is the space of motor trajectories $\gamma_t : [0, T] \to \mathbb{R}^{3k}$ (for k joints) equipped with:

- an admissibility structure $\mathrm{Adm}(\mathcal{C})$ encoding biomechanical constraints,
- an equivalence relation $\sim$ identifying motor-equivalent trajectories,
- a compression map $\kappa : \mathcal{G}/\!\sim \to \Sigma^*$ into a symbol alphabet Σ.

A *symbol* $s \in \Sigma^*$ is any element in the image of κ. The fiber $\kappa^{-1}(s)$ is the set of gestures that compress to s.

⋆ Remark

The fiber $\kappa^{-1}(s)$ is generically non-trivial: many gestures produce the same symbol. This is not a defect but a feature — it is precisely the robustness of symbolic communication. A child can write "A" in many different ways, yet the symbol is recognized. The projection κ throws away all the variation in $\kappa^{-1}(s)$.

10.2 The Gesture Manifold

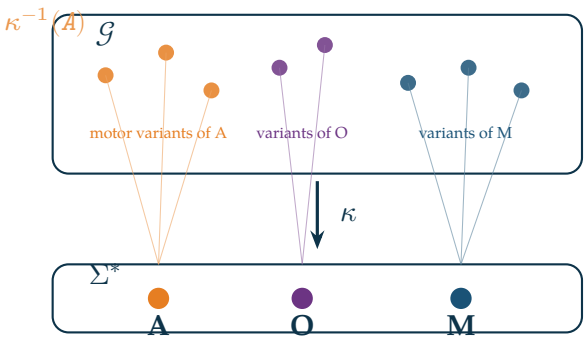

Figure 10.1. The gesture manifold $\mathcal{G}$ with three regions: the admissible trajectory space $\mathcal{A}(\mathcal{C})$ (outer shell), the motor equivalence classes $[\gamma]_\sim$ (middle layer, shown as vertical fibers), and the symbolic projection Σ^* (the base, projected downward). The compression map κ collapses each fiber to a single symbol.

The gesture manifold has topological structure that symbols cannot capture. Consider the gesture for the letter "O": it can be traced clockwise or counterclockwise. Both map

to the same symbol, but they are topologically distinct as trajectories — one is a loop oriented $+1$, the other -1.

Proposition 10.1: Topological Loss Under Compression

Let $\kappa : \mathcal{G}/\sim \to \Sigma^*$ be a compression map with non-trivial fibers. Then κ necessarily loses topological invariants of order ≥ 1 (homotopy classes, winding numbers, orientation).

Proof. Since fibers are non-trivial, distinct homotopy classes of trajectories can map to the same symbol. Homotopy is not definable in Σ^* (a discrete set), so the map cannot be homotopy-class-preserving. The same argument applies to winding numbers and orientation since Σ^* carries no continuous structure. ■

This proposition has a direct pedagogical implication. If we teach children symbols before gesture, we are teaching them to operate in the projected space Σ^* while withholding information about the richer space $\mathcal{G}$ from which symbols derive. We are, in effect, teaching the shadow before teaching the object.

10.3 Motor Structure as the Substrate of Meaning

Conceptual Aside: The Compression Hierarchy

There is a natural compression sequence running from motor acts to cultural artifacts:

$$\underbrace{\text{motor trajectory}}_{\mathcal{G}} \xrightarrow{\kappa_1} \underbrace{\text{gesture class}}_{\mathcal{G}/\sim} \xrightarrow{\kappa_2} \underbrace{\text{glyph}}_{\Sigma} \xrightarrow{\kappa_3} \underbrace{\text{word}}_{\Sigma^*} \xrightarrow{\kappa_4} \underbrace{\text{concept}}_{\mathcal{C}}$$

Each arrow is a lossy projection. Information destroyed at each step is not recovered at later steps. The *fiber* at each level contains what was discarded.

The **Gesture Before Symbol** thesis holds that meaning lives primarily in $\mathcal{G}$ and $\mathcal{G}/\sim$, not in Σ^*. Current NLP systems operate almost exclusively at the Σ^* level and below — they have, in a precise sense, discarded the meaning while keeping only the symbols.

The implications for artificial intelligence are substantial. A system that learns only from text has access only to $\kappa_3 \circ \kappa_4$ — the last two compressions. It sees word co-occurrences but not the motor equivalence classes that give words their gestural coherence. It knows that "grasp" and "grip" are related but not *why* — because both compress gesture classes involving finger flexion under load.

Warning

This is not an argument that large language models have no understanding. It is an argument that their understanding is *systematically incomplete* in a characterizable way: they are missing the sub-Σ^* structure of $\mathcal{G}$. The missing structure is not randomly distributed — it concerns specifically: spatial reasoning, force and effort, affordance, embodied metaphor, and temporal dynamics.

10.4 Evolutionary Evidence

The priority of gesture over symbol is not only developmental — it appears in evolutionary sequence as well.

Homo habilis: 2.6–1.5 Ma

The hominin hand achieved its current precision grip proportions approximately 2 million years ago with *Homo habilis* — roughly 1.5 million years before any agreed evidence of symbolic behavior. For most of human evolution, the hand was the primary cognitive instrument.

Historical Note

Ibn Rushd (Averroës) argued in *De Anima* that the hand is the "organ of organs" — the instrument that makes all other instruments possible. This anticipates the modern claim that tool use co-evolved with language, with the hand as the shared substrate. In the RSVP framework, the hand is the primary *accessibility transducer*: it converts internal constraint structures into external modifications of the world.

The trajectory from:

$$\text{grip} \rightarrow \text{tool use} \rightarrow \text{mark-making} \rightarrow \text{glyph} \rightarrow \text{alphabet}$$

is a compression sequence of exactly the form described in the previous section. Each transition discards variation while preserving a projective residue.

Exercises

Exercise

Let $\Sigma = \{0, 1\}$ and consider the compression map $\kappa : \mathcal{G} \to \Sigma^*$ that maps a trajectory γ to its Morse encoding (dots and dashes based on duration of contact). What information is in the fiber $\kappa^{-1}(\texttt{SOS})$? Describe three distinct gestures that produce the same Morse sequence.

Topological

Show that the space of all closed loops in $\mathbb{R}^2$ based at the origin is not discrete (unlike Σ^*). What topological invariant distinguishes the clockwise "O" from the counterclockwise "O"? Why does this invariant vanish under any map to a discrete set?

Open problem

Construct a formal model of the compression map $\kappa_1 : \mathcal{G} \to \mathcal{G}/\sim$ using the framework of Riemannian submersions. What is the appropriate metric on $\mathcal{G}$ such that motor-equivalent trajectories are at zero distance? Can this metric be learned from kinematic data?

11

Trajectories and Admissibility

A gesture that cannot be admitted
is not a gesture — it is noise.
Admissibility is what turns motion into meaning.
— Flyxion, *Semantic Infrastructure*

Chapter 10 established that gestures are trajectories in constrained manifolds and that symbols are projections of gesture equivalence classes. This chapter develops the mathematical structure of the gesture manifold more carefully, focusing on the *admissibility conditions* that separate meaningful gesture from random motion.

App. F for gesture manifolds; App. H for admissibility functionals

11.1 Gesture Manifolds

The gesture space $\mathcal{G} = \text{Path}([0, T], X)$ of all possible hand trajectories is enormous — a function space of infinite dimension. Most of this space is physically inaccessible, kinematically impossible, or neurologically non-executable. The gesture manifold $M_{gestureidx} \subset \mathcal{G}$ is the small submanifold of trajectories that real hands can actually produce.

Definition 11.1: Biomechanical Constraint Manifold

The *biomechanical constraint manifold* $M_{\text{bio}} \subset \mathcal{G}$ is the set of trajectories satisfying:

1. **Range:** each joint angle θ_i satisfies $\theta_i^{\min} \leq \theta_i \leq \theta_i^{\max}$.
2. **Velocity:** angular velocity $|\dot{\theta}_i| \leq v_i^{\max}$.
3. **Coordination:** adjacent finger joints move in coordinated patterns (flexion synergies, extension synergies).
4. **Continuity:** trajectories are smooth (C^2 at minimum).

Within M_{bio} lies a further restriction: the *skill manifold* $M_{\text{skill}} \subset M_{\text{bio}}$ of trajectories that a particular person, with their particular training and motor history, can execute reliably. A concert pianist's skill manifold includes trajectories that a novice's does not; a surgeon's

includes trajectories that are biomechanically possible but not executable without years of practice.

11.2 Constraint Spaces on Trajectory Space

The admissibility framework of Chapter 1 and Appendix H applies to trajectory spaces directly.

Definition 11.2: Gesture Constraint Space

A *gesture constraint space* is a triple $\mathcal{C}_{gestureidx} = (\mathcal{G}, A_{gestureidx}, \kappa_{gestureidx})$ where the admissible region $A_{gestureidx} = \kappa_{gestureidx}^{-1}(0)$ is the set of gestures that satisfy all biomechanical, skill, and contextual constraints.

The constraint functional $\kappa_{gestureidx} : \mathcal{G} \to \mathbb{R}_{\geq 0}$ measures total constraint violation. A typical decomposition:

$$\kappa_{gestureidx}(\gamma) = \kappa_{\text{bio}}(\gamma) + \kappa_{\text{skill}}(\gamma) + \kappa_{\text{context}}(\gamma)$$

where each term measures violation of biomechanical, skill, and contextual constraints respectively.

11.3 Motor Equivalence Classes Revisited

Two admissible gestures are motor-equivalent when they differ only within the fiber of the symbolic projection — when their difference is invisible at the symbolic output level.

Definition 11.3: Admissible Motor Equivalence

Two gestures $\gamma_1, \gamma_2 \in A_{gestureidx}$ are *admissibly motor-equivalent*, written $\gamma_1 \approx_m \gamma_2$, if $\Phi(\hat{C}(\gamma_1)) = \Phi(\hat{C}(\gamma_2))$ — they produce the same symbolic output after canonicalization.

The admissibility condition ensures we only identify gestures that are genuinely executable, not merely gestures that would produce the same symbol if they could be executed.

Example

Writing the letter "e" with the dominant hand and the non-dominant hand both produce the symbol "e", so $\gamma_R \approx_m \gamma_L$. But γ_L is often in the skill manifold for

right-handed writers only under unusual conditions — it is admissible but not in M_{skill}. Admissibility conditions prevent us from identifying these as equivalent in normal writing contexts.

11.4 Canonical Gestures

The canonical gesture is the minimum-energy, maximum-reliability representative of an equivalence class.

Definition 11.4: Canonical Gesture

The *canonical gesture* $\hat{\gamma}$ for equivalence class $[\gamma]_{\approx_m}$ is the solution to:

$$\hat{\gamma} = \arg\min_{\gamma' \approx_m \gamma} E(\gamma') \quad \text{subject to} \quad \gamma' \in A_{gestureidx}$$

where $E(\gamma') = \int_0^T \|\dot{\gamma}'(t)\|^2 \, dt$ is the kinetic energy.

Theorem 11.1: Canonical Gesture Existence

Under mild regularity conditions on $A_{gestureidx}$ (weak compactness of the admissible set and lower semicontinuity of E), every non-empty equivalence class has a canonical gesture.

Proof. [Sketch] By the direct method of the calculus of variations: the energy functional E is coercive and lower semicontinuous on the weakly compact admissible set; therefore it attains its infimum. ■

11.5 Accessibility of Gesture Continuations

The accessibility entropy of a gesture γ at time t measures how many admissible continuations are available:

$$S(\gamma, t) = \log \mathrm{Vol}(\{\gamma' \in A_{gestureidx} : \gamma'|_{[0,t]} = \gamma|_{[0,t]}\}).$$

This measures the remaining freedom given the past trajectory — how many ways the gesture can continue.

Exercise

Show that the accessibility entropy $S(\gamma, t)$ is non-increasing in t along any fixed trajectory γ. What does equality $S(\gamma, t+\delta) = S(\gamma, t)$ imply about the gesture at time t?

Exercise

Define the *gesture manifold curvature* at a point $\gamma \in M_{gestureidx}$ as the second fundamental form of the embedding $M_{gestureidx} \hookrightarrow \mathcal{G}$. Interpret high curvature geometrically. What kind of gesture motions correspond to regions of high curvature?

Open problem

The canonical gesture minimizes kinetic energy among equivalent gestures. Is this the same as maximizing reliability (probability of correct recognition under noise)? If not, construct an example where the minimum-energy gesture is less reliable than a higher-energy alternative. What modified optimality criterion resolves the tension?

12

Keyboards as Gesture Sensors

Every key you press leaves a signature
in kinematic space that the text does not record.
The keyboard hears more than it reports.
— Flyxion, *Semantic Infrastructure*

The keyboard is the primary input device of the information age. It has been analyzed as a symbol source (by information theorists), as an ergonomic tool (by human factors engineers), and as a cultural artifact (by historians of technology). This chapter analyzes it as something different: a *gesture sensor* — a device that samples the continuous kinematic behavior of a person's hands and reports a discrete projection of that behavior.

App. G for the full keyboard geometry formalism

12.1 Typing as Coordinated Motor Behavior

A trained typist's hands move continuously, with overlapping finger activations, rhythmic patterns, and smooth inter-key transitions. The keyboard, however, reports only discrete events: key-down and key-up, time-stamped to millisecond precision.

Definition 12.1: Typing Stream

A *typing stream* is the sequence of keyboard events:

$$T = ((k_1, t_1^{\text{down}}, t_1^{\text{up}}), (k_2, t_2^{\text{down}}, t_2^{\text{up}}), \ldots)$$

where $k_i \in K$ is a key and $t_i^{\text{down}} < t_i^{\text{up}}$ are the key-press and key-release times.

The typing stream is the *projection* of the full kinematic hand trajectory onto the discrete key-event space. The projection discards:

- Finger position between key presses (the flight phase),
- Finger velocity and acceleration (the dynamics),

- Inter-finger coordination (simultaneous movements),
- Hand position and wrist posture,
- Pressure beyond the binary press/release threshold.

12.2 The Hidden Signal Beneath Text

The typing stream contains considerably more information than the text it produces, and the text contains considerably less than the typing stream.

Definition 12.2: Keystroke Dynamics

The *keystroke dynamics* of a typing session are the timing features of the typing stream:

- **Dwell time:** $D_i = t_i^{\text{up}} - t_i^{\text{down}}$ (how long each key is held).
- **Flight time:** $F_i = t_{i+1}^{\text{down}} - t_i^{\text{up}}$ (time between key releases and next key presses).
- **Digraph latency:** $L_{ij} = t_j^{\text{down}} - t_i^{\text{down}}$ (time between successive key presses).
- **Overlap duration:** $O_{ij} = \min(t_i^{\text{up}}, t_j^{\text{up}}) - t_j^{\text{down}}$ (duration of simultaneous key presses).

These timing features are individual-specific, consistent across sessions, and robust to training. They constitute a *biometric*: keystroke dynamics can identify individuals with accuracy comparable to fingerprinting. The text they produce contains none of this information.

Conceptual Aside: Text as Information Bottleneck

The conventional view of typing: person → text → reader.
The gesture view: person → kinematic stream → typing stream → text → reader.
Each arrow is a lossy projection. The text at the end contains only the symbolic content. The kinematic stream contains the motor signature of the person. The typing stream is between them: richer than text (it includes timing), poorer than kinematics (it discards position).
Current AI language models are trained on text — the end of the chain. They have no access to the kinematic or timing information. This is why they cannot detect fatigue, emotion, or identity from text alone: that information was discarded two projections upstream.

12.3 Overlap, Pivots, and Release Structures

The most information-rich features of the typing stream are those that encode the coordination structure of the two hands.

Definition 12.3: Key Overlap

Keys k_i and k_j *overlap* if their press intervals intersect:

$$[t_i^{\text{down}}, t_i^{\text{up}}] \cap [t_j^{\text{down}}, t_j^{\text{up}}] \neq \emptyset.$$

The *overlap pattern* of a word is the set of overlapping key pairs.

Overlap patterns are kinematically determined: which keys overlap depends on which fingers are used and how the transitions between them are timed. High-skilled typists show characteristic overlap patterns that low-skilled typists do not — the patterns are signatures of motor expertise.

Definition 12.4: Typing Pivot

A *typing pivot* occurs at position i in a word when the typing changes hands:

$$H(k_{i-1}) \neq H(k_i)$$

where $H(k) \in \{L, R\}$ is the hand assignment. Pivots are characterized by a brief acceleration (flight time F_i is typically shorter at pivots due to parallel hand preparation).

Definition 12.5: Release Structure

The *release structure* of a word is the ordering of key-up events: whether key i is released before or after key j is pressed. Release structures encode the chunking of words into motor programs.

12.4 Inter-Hand Coordination

The deepest structure in typing kinematics is the coordination between the two hands. Because the two hands are semi-independent motor systems, their coordination creates rich temporal structure.

Definition 12.6: Hand Coordination Profile

The *hand coordination profile* of a typing session is the function $\rho : K \times K \to \mathbb{R}$ where $\rho(k_i, k_j)$ is the average flight time from k_i to k_j across all occurrences. Same-hand transitions have $\rho(k_i, k_j) > 0$; cross-hand transitions tend to have smaller ρ due to parallel preparation.

The hand coordination profile is a complete characterization of the timing structure of a person's typing. Two typists producing the same text at the same overall speed can have radically different coordination profiles — reflecting different motor programs for the same symbolic output.

12.5 Keyboard Geometry Revisited

The keyboard geometry formalism of Appendix G defines keys as vertices in a motor graph $\Gamma = (K, E)$. The typing stream is a walk on this graph. The walk's properties — edge traversal times, node dwell times, vertex degree sequences — encode the kinematic structure of the typing.

Theorem 12.1: Keyboard Graph is a Gesture Sensor

The keyboard graph Γ and the typing stream T together determine the first-order kinematic structure of the typing gesture: specifically, the digraph latency profile $\{L_{ij}\}$ and the overlap pattern.

Proof. The digraph latency $L_{ij} = t_j^{\text{down}} - t_i^{\text{down}}$ is directly available from T. The overlap pattern is determined by comparing press/release intervals. Both are fully determined by T. The keyboard graph Γ provides the spatial embedding that interprets the timing: knowing which keys are adjacent, which hand they belong to, and their stretch costs allows the latencies to be decomposed into flight phase, preparation, and keystroke components. ■

Exercise

For the word "semantic", identify all key pairs that overlap (assume standard QWERTY layout and 10-finger touch typing). Where are the typing pivots? Describe the expected release structure.

Exercise

Define the *typing entropy* of a word w as the entropy of the distribution of possible overlap patterns over skilled typists of w. Is typing entropy higher for frequently typed words or rare words? Explain intuitively why.

Research

The digraph latency profile $\{L_{ij}\}$ is a matrix of size $|K| \times |K|$. For standard QWERTY, $|K| \approx 47$. This matrix has ≈ 2200 entries, most of which are rarely observed in practice. Propose a dimensionality-reduction technique (PCA, manifold learning, or another method) that extracts the dominant modes of variation in $\{L_{ij}\}$ across typists. What do you expect the dominant modes to represent?

13

Gesture Reconstruction as Inverse Inference

Recognition is not classification.
Classification asks: which box?
Recognition asks: what happened?
— Flyxion, *Semantic Infrastructure*

Conventional gesture recognition systems are classifiers: given an input (a signal, an image, a sequence of keystrokes), output a label from a fixed vocabulary. This chapter argues that classification is the wrong model. The right model is *inverse inference*: given an observation (a projection of the gesture), infer the most probable complete gesture that produced it.

Connects to Bayesian inverse problems and App. F §F.14

13.1 Why Classification is Insufficient

Classification assumes a fixed set of possible outputs and assigns the input to the best-matching category. For gesture recognition, this means: given a hand motion, output the most likely character, word, or command from a predetermined vocabulary.

The problem with classification is that it is *domain-closed*: it can only recognize gestures in its training vocabulary. It cannot handle:

- **Novel gestures:** gestures not in the training set, including new words, technical terms, proper nouns.
- **Degraded inputs:** gestures that are partially obscured, interrupted, or produced under unusual conditions.
- **Compositional meanings:** the meaning of a gesture sequence is not always the concatenation of individual gesture meanings (syntax matters).
- **Continuous signals:** the boundary between gesture classes is not sharp; classification forces a hard decision where the underlying signal is continuous.

Inverse inference handles all of these naturally, because it reasons about the underlying gesture rather than the output category.

13.2 Trajectory Reconstruction

The core of inverse inference is trajectory reconstruction: given observed data O (a projection of the gesture), find the distribution over complete gestures γ that could have produced O.

Definition 13.1: Trajectory Reconstruction Problem

Given:

- Observation O (projection of some unknown gesture),
- Forward model $P(O|\gamma)$ (likelihood of observing O given gesture γ),
- Prior $P(\gamma)$ (distribution over gestures in the admissible region).

The *trajectory reconstruction* is the posterior distribution:

$$P(\gamma|O) = \frac{P(O|\gamma) \cdot P(\gamma)}{P(O)}.$$

This is a Bayesian inverse problem. The prior $P(\gamma)$ encodes knowledge of the gesture manifold: admissible gestures have high prior probability; inadmissible gestures have zero prior probability. The likelihood $P(O|\gamma)$ encodes the projection model: how likely is observation O given that the underlying gesture was γ?

> ⋆ **Remark**
>
> In the Spherepop framework, the prior $P(\gamma)$ is determined by the accessibility entropy $S(\gamma)$: gestures in high-accessibility regions of the gesture manifold are more probable a priori, because they have more neighboring admissible gestures. The projection model $P(O|\gamma)$ is the probabilistic version of the canonical projection $\Phi \circ \hat{C}$ from Appendix F.

13.3 Embodied Semantics

The trajectory reconstruction framework provides a rigorous formalization of *embodied semantics*: the view that meaning is grounded in bodily experience and motor behavior, not in abstract symbol manipulation.

Definition 13.2: Embodied Semantic Content

The *embodied semantic content* of a gesture γ is the posterior distribution $P(\gamma|O)$: the distribution over all possible gestures (including their full kinematic details) consistent with the observed projection O.

The traditional symbol "a" has *symbolic* semantic content: it refers to a category of objects, sounds, or characters. The embodied semantic content of the gesture that produced "a" includes all of this plus the kinematic signature of the producer: their hand size, writing style, emotional state, familiarity with the text, and motor history.

Embodied semantics is richer than symbolic semantics. It is the difference between knowing that someone said "hello" and knowing *how* they said it — tentatively, warmly, anxiously, routinely. The word is the same; the gesture is different; the embodied content is different.

13.4 Constraint Multiplication

Inverse inference becomes dramatically more powerful when multiple observations provide simultaneous constraints on the unknown gesture.

Definition 13.3: Constraint Multiplication

Given n independent observations $O_1, \dots, O_n$, each constraining γ, the joint posterior is:

$$P(\gamma|O_1, \dots, O_n) \propto P(\gamma) \prod_{i=1}^{n} P(O_i|\gamma).$$

Each additional observation *multiplies* a constraint factor, sharpening the posterior.

Constraint multiplication is the mathematical reason why multi-modal sensing is powerful. A keyboard alone provides timing data but no spatial data. A camera alone provides spatial data but misses key timing. Together, they multiply constraints and dramatically narrow the posterior, making reconstruction possible where either alone would be ambiguous.

Example

Consider reconstructing the gesture for typing the word "constraint."

- Typing stream alone: provides key sequence and timing. The posterior over kinematic gestures is wide — many hand configurations could produce this timing.

- Camera alone: provides hand shape and position. The posterior over typed words is wide — many words could be produced with similar hand shapes.
- Together: timing constrains the temporal structure; camera constrains the spatial structure. Their product narrows the posterior sharply, and reconstruction becomes precise.

13.5 Latent Intention

The deepest application of inverse inference is the reconstruction of *latent intention*: not just what gesture was made, but what the person was *trying* to do.

Intention is a higher-level description of the gesture — the goal that drove the motor behavior, which may be only partially achieved. A person trying to type "receive" who accidentally types "recieve" made a gesture consistent with their intention but not their intention's result.

Definition 13.4: Latent Intention Model

The *latent intention* is a hidden variable I in a hierarchical Bayesian model:

$$P(O, \gamma, I) = P(O|\gamma) \cdot P(\gamma|I) \cdot P(I).$$

Given observation O, the reconstructed intention is the marginal posterior $P(I|O) = \int P(I|\gamma)P(\gamma|O)\, d\gamma$.

Autocorrect systems that correct spelling errors are primitive implementations of latent intention reconstruction: they infer the intended word from the actually typed word. More sophisticated systems would infer the intended meaning from the intended word, allowing correction of semantically incorrect but syntactically valid text.

13.6 The Inverse Inference Principle

The Inverse Inference Principle

Gesture recognition is not categorization from a fixed vocabulary. It is probabilistic reconstruction of the complete kinematic event that produced the observed projection. The recognized symbol is the mode of the posterior distribution over gestures; the recognized meaning is the mode of the posterior over intentions. Classification is the special case where the posterior is sharply peaked at a single

gesture class.

Exercise

Write out the full Bayesian inverse problem for reconstructing a handwritten letter from a binarized (black/white) image. Define $P(O|\gamma)$ and $P(\gamma)$ explicitly for this case.

Exercise

In the constraint multiplication formula, show that adding an independent observation can never *increase* the entropy of the posterior (i.e., never makes reconstruction less precise). Under what conditions does adding an observation leave the entropy unchanged?

Harder

The latent intention model introduces three levels: observation, gesture, and intention. Extend this to a four-level model with an additional "goal" layer above intention (what the person is trying to achieve across multiple words or sentences). What additional data would be needed to reconstruct goals?

Part IV

Admissibility and Constraint Theory

14

Accessibility Landscapes

A landscape has peaks, valleys, and paths between them.
Intelligence is knowing which paths lead where.
— Flyxion, *Semantic Infrastructure*

Part IV begins the formal development of constraint theory and admissibility. This chapter introduces accessibility landscapes — the geometric representation of future possibility — as the central object of the framework.

App. J gives the full formal treatment of accessibility geometry

14.1 Admissible Futures

From a given state x at time t, some future states are reachable and some are not. Among those reachable, some are admissible (they satisfy all constraints) and some are not. The accessibility landscape is the function that maps each present state to the volume of its admissible futures.

Definition 14.1: Admissible Future Set

The *admissible future set* from state x over horizon H is:

$$\mathcal{A}_H(x) = \{y \in X : \exists \text{admissible path } \gamma : x \rightsquigarrow y \text{ with } |\gamma| \leq H\}$$

where admissibility of the path requires $\kappa(\gamma(t)) = 0$ for all $t \in [0, |\gamma|]$.

Definition 14.2: Accessibility Landscape

The *accessibility landscape* is the function $S_H : X \to \mathbb{R}_{\geq 0}$ defined by:

$$S_H(x) = \log \mathrm{Vol}(\mathcal{A}_H(x)).$$

Points with high S_H have many admissible futures; points with low S_H are near dead ends. The landscape S_H is a scalar field over the state space.

14.2 Constraint Geometry

The shape of the accessibility landscape is determined entirely by the constraint structure. Tight constraints create narrow valleys; loose constraints create broad plateaus.

Definition 14.3: Constraint Tightness

The *tightness* of a constraint c at state x is:

$$\tau_c(x) = \frac{\|\nabla_x \kappa_c(x)\|}{\kappa_c(x) + \epsilon}$$

for small $\epsilon > 0$. Large tightness indicates the constraint is actively binding (small κ_c, large gradient).

Proposition 14.1: Tightness Reduces Accessibility

For any state x and active constraint c, increasing the tightness $\tau_c(x)$ (holding all else fixed) decreases $S_H(x)$.

Proof. [Sketch] An active constraint eliminates the directions in its gradient direction from the admissible future set. Higher tightness means the constraint is more binding — it eliminates more of the local tangent space — reducing the volume of admissible futures. ■

14.3 Navigation Over Possibility Spaces

The accessibility landscape provides a natural framework for *navigation*: moving through state space in ways that preserve or increase future options.

Definition 14.4: Accessibility-Preserving Path

A path $\gamma : [0, T] \to X$ is *accessibility-preserving* if $S_H(\gamma(t))$ is non-decreasing in t.

Accessibility-preserving paths move through state space in ways that keep future options open. They avoid dead ends, narrow canyons, and irreversible commitments. They

represent *flexible* strategies — strategies that maintain the ability to respond to new information.

Definition 14.5: Accessibility Gradient Flow

The *accessibility gradient flow* is the dynamical system:

$$\dot{x}(t) = \nabla_x S_H(x(t)).$$

Trajectories of this flow always move in the direction of increasing accessibility — toward states with more admissible futures.

⋆ **Remark**

Accessibility gradient flow is not always the best strategy. Sometimes the optimal path requires temporarily reducing accessibility (entering a narrow canyon) to reach a high-accessibility plateau on the other side. This is the mathematical version of the common observation that the most flexible long-term strategies sometimes require short-term commitments.

14.4 Accessibility Wells, Peaks, and Ridges

The landscape S_H has topological features that correspond to important structural properties of the underlying system.

Definition 14.6: Landscape Features

- An *accessibility well* is a local minimum of S_H: a state with fewer admissible futures than all nearby states. Wells are traps: systems that enter them tend to stay.
- An *accessibility peak* is a local maximum of S_H: a state with more admissible futures than all nearby states. Peaks are hubs: systems near them have the most flexibility.
- An *accessibility ridge* is a connected set of high-S_H states: a corridor of flexibility connecting accessible regions. Ridges are the highways of the possibility space.

Example

In a career trajectory:

- A highly specialized technical skill is an accessibility well: expertise is deep but narrow; few adjacent career paths exist.

- A broad education in mathematics, writing, and programming is an accessibility peak: many careers are open; the system has maximum flexibility.
- A sequence of jobs in related but broadening fields is a ridge: each step maintains accessibility while moving toward a destination.

Exercise

Define the *escape time* from an accessibility well as the expected number of steps needed to reach a state with S_H above a threshold τ, starting from the well minimum. How does escape time depend on the depth of the well (how much lower S_H is at the minimum than at the surrounding threshold)?

Exercise

Show that the gradient flow $\dot{x} = \nabla S_H(x)$ cannot escape from an accessibility well (cannot reach a state with higher S_H than the well entrance). What does this say about the limitations of pure accessibility-gradient strategies?

Cosmological

In the RSVP framework, structures (galaxies, stars, organisms) are interpreted as accessibility wells in the cosmological accessibility landscape. Explain why such structures are stable: once a galaxy forms, why does it persist? Use the accessibility well interpretation rather than conventional gravitational arguments.

15

CLIO and Constraint-Leveraged Inference

Constraints are not obstacles to thought.
They are the medium in which thought becomes possible.
— Flyxion, *Semantic Infrastructure*

The previous chapter developed accessibility landscapes as geometric objects. This chapter introduces CLIO — Constraint-Leveraged Inference Optimization — the framework for using constraint structure to make inference tractable.

App. H gives the formal admissibility theory

15.1 Constraint as Computation

The central claim of CLIO is counterintuitive: *constraints accelerate computation rather than impeding it*.

Without constraints, a search problem requires exploring an exponentially large space. With tight constraints, most of this space is immediately ruled out, and the search reduces to a small accessible region. The tighter the constraints, the smaller the search space, and the more efficient the inference.

Definition 15.1: Constraint-Leveraged Inference

Constraint-Leveraged Inference (CLI) for a problem $(X, \mathcal{Q})$ (state space X, query $\mathcal{Q}$) with constraint space $\mathcal{C} = (X, A, \kappa)$ is inference restricted to A:

$$\mathrm{CLI}(\mathcal{Q}, \mathcal{C}) = \arg\max_{x \in A} P(x|\mathcal{Q}).$$

The optimization is over the admissible region A only.

The power of CLI comes from the fact that $|A| \ll |X|$ in typical problems. Medical diagnosis is an example: the space of all possible symptom patterns is enormous, but the space of symptom patterns consistent with known diseases (the admissible region) is much smaller. A doctor's diagnostic reasoning is, informally, CLI: they do not consider all

possible diagnoses; they consider only those consistent with the presenting symptoms.

15.2 Sparse Projection

CLIO implements constraint-leveraged inference through *sparse projection*: projecting the query into a space where most features are zero (ruled out by constraints) and only a sparse set of features are active.

Definition 15.2: Sparse Projection

A *sparse projection* is a map $\pi : X \to \mathbb{R}^n$ such that for most queries $\mathcal{Q}$, the projected query $\pi(\mathcal{Q})$ has at most $k \ll n$ nonzero coordinates. The *sparsity ratio* is k/n.

Constraint structure naturally induces sparse projections: if the admissible region A is a low-dimensional manifold in X, then any projection of A into a coordinate system aligned with the constraint directions will be sparse.

15.3 Search Without Exhaustive Search

TCU Encoding: Constraint Restriction as Security

The RSVP security duality has a precise empirical demonstration in analog optical neural networks. These systems use physical photonic circuits rather than digital processors, and suffer from hardware noise and low precision — which the orthodox engineering view treats as defects to be suppressed.

The RSVP reinterpretation: noise and low precision are deliberate *constraint restrictions*. By narrowing the admissible trajectory space (reducing S locally), they eliminate the mathematical room that an adversarial attacker requires.

Standard binary encoding gives attackers a *gradient lever*: flipping the most-significant bit of an 8-bit number changes the value by 128, while flipping the least-significant bit changes it by 1. An attacker can maximize damage with minimal effort by targeting the highest-leverage bit.

Truncated Complementary Unary (TCU) encoding removes this lever entirely: every bit represents the same value, so no bit has more adversarial leverage than any other. The admissibility radius shrinks from $\mathcal{O}(2^{b-1})$ to $\mathcal{O}(1)$ — the mathematical space for a single attack collapses by an exponential factor.

Empirical result on VGG-8/CIFAR-10:

- Clean baseline accuracy: 88%
- After adversarial weight attack (unprotected): 13.52%

- After RSVP-TCU defense: 86.73% — near-full recovery
- Memory overhead of the defense: 2.36% (applied to the 0.2% most sensitive weights only)

This demonstrates the CLIO principle in hardware: by identifying the topological choke points (the high-leverage weights) and restricting their admissibility radius, the entire system's robustness is secured at minimal cost. Constraint restriction is not a limitation — it is precision targeted security.

The algorithmic consequence of sparse projection is that CLI can solve problems that naive exhaustive search cannot.

Theorem 15.1: CLIO Complexity Bound

If the admissible region A has volume $\mathrm{Vol}(A) = \epsilon \cdot \mathrm{Vol}(X)$ (a fraction ϵ of the full state space), then CLI inference on A requires time $O(\epsilon^{-1})$ less than exhaustive search on X.

Proof. [Sketch] Exhaustive search visits all of X, taking time $O(\mathrm{Vol}(X))$. CLI restricts to A, taking time $O(\mathrm{Vol}(A)) = O(\epsilon \cdot \mathrm{Vol}(X))$. The ratio is $O(\epsilon^{-1})$. ■

In practice, ϵ can be astronomically small. In a protein folding problem, the physically accessible conformations are a vanishingly small fraction of all geometrically possible conformations. In language generation, grammatically and semantically coherent sentences are a tiny fraction of all possible strings. CLIO exploits this to make inference tractable.

Exercise

Apply CLIO to the problem of finding a route between two cities on a road network. What is the full state space X? What constraints define the admissible region A (valid routes)? Estimate the sparsity ratio ϵ for a road network with 1000 cities.

Exercise

In the RSVP framework, the accessibility entropy $S(x) = \log \mathrm{Vol}(A_x)$ measures the size of the admissible future set. Show that CLI inference in a state with low accessibility entropy S is faster than in a state with high S. What does this say about the tradeoff between flexibility (high S) and inferential efficiency (low S)?

Adversarial

The IAD (Introspective Adversarial Distillation) framework from the introduction assigns a trust weight $\alpha(x) \in [0, 1]$ to each query x. Reformulate this as a CLIO problem: what is the constraint space? What does "admissible" mean in the context of teacher-student inference? How does the sparsity ratio relate to the trust weight?

16

Projection Engines

The same latent structure
can be heard as music,
seen as image,
read as text.
The engine is the same; the output is the choice.
— Flyxion, *Semantic Infrastructure*

Chapter 15 showed how constraints reduce the search space for inference. This chapter examines the output side: how shared latent structures project into text, music, images, and behavior — and why the same underlying constraint geometry can appear in radically different surface forms.

App. B for the formal projection theory; App. N for universal approximation

16.1 Outputs as Projections

In the RSVP framework, any observable output is a projection of the underlying field configuration $(\Phi, \mathbf{v}, S)$ onto an observable space. Different output modalities correspond to different projections.

Definition 16.1: Output Projection

An *output projection* is a map $\Pi_{\text{out}} : \mathcal{F} \to Y$ from the field configuration space $\mathcal{F}$ to an observable output space Y. Different projection maps Π_{out} define different output modalities.

The key insight is that $\mathcal{F}$ — the space of field configurations — is shared across all modalities. The differences between text, music, and images are differences in the projection, not differences in the underlying structure.

16.2 Text as Projection

Language is perhaps the most compressed of all projections. A sentence of n words drawn from a vocabulary V occupies a point in the discrete space V^n. The sentence's meaning, however, lives in the continuous semantic manifold M_s of Chapter 23 (Appendix L).

The text projection $\Pi_{\text{text}} : M_s \to V^n$ maps semantic configurations to word sequences. This projection is enormously many-to-one: the fiber $\Pi_{\text{text}}^{-1}(w)$ over a sentence w contains the entire equivalence class of semantic configurations that would be expressed by w. Synonymy, paraphrase, and translation are all manifestations of non-trivial fibers in the text projection.

16.3 Music as Projection

Music projects the same latent structure into a different observable space: time-frequency energy distributions, spectral sequences, rhythmic patterns.

Definition 16.2: Musical Projection

The *musical projection* is $\Pi_{\text{music}} : M_s \to \mathcal{M}_{\text{mus}}$ where $\mathcal{M}_{\text{mus}}$ is the space of musical performances (continuous waveforms, or symbolic scores, depending on level of analysis).

The shared latent structure between text and music is most visible in their common organizational principles: narrative arc, tension and release, repetition and variation, hierarchical phrase structure. These are not metaphors — they are manifestations of the same accessibility geometry projected through different modalities.

16.4 Images as Projection

Visual images project the latent structure into two-dimensional spatial patterns. The projection $\Pi_{\text{image}} : \mathcal{F} \to \mathcal{I}$ (where $\mathcal{I}$ is the space of images) has an interesting property: it tends to be more faithful than text or music projections, in the sense that natural images often have smaller fibers — there are fewer semantic configurations consistent with a given image than there are configurations consistent with a given sentence.

This is why "a picture is worth a thousand words": the image projection retains more information than the text projection.

16.5 Shared Latent Structures

The deepest claim of the projection engine framework is that text, music, images, and behavior share a common latent space.

The Projection Engine Principle

Multiple observable modalities are different projections of the same underlying accessibility geometry. Translation between modalities is not conversion between different objects — it is comparison of different projections of the same object. The universal structure is not the text, not the music, not the image, but the field configuration $(\Phi, \mathbf{v}, S)$ from which all are projected.

Exercise

Identify three pairs of text and image that are "projections of the same thing" — where the text and image share the same latent structure. For each pair, describe what the shared latent structure is. What information does each modality contain that the other lacks?

Exercise

Music is sometimes described as "temporal" and images as "spatial." In the projection engine framework, is this distinction fundamental or an artifact of the projection? Construct an argument that both modalities project structures that are neither purely temporal nor purely spatial.

Technical

Universal approximation theorems (Appendix N) say that neural networks can approximate any continuous function. Interpret this in terms of projection engines: what is being approximated, and what is the projection? What does "sufficient depth" mean in terms of the accessibility landscape?

17

Sheaves, Fibers, and Gluing

Local truth is not enough.
A patchwork of local truths must agree at the seams before it becomes global truth.
— Flyxion, *Semantic Infrastructure*

The previous chapters developed constraint theory (Chapter 14), inference (Chapter 15), and projection (Chapter 16) as local phenomena: properties of individual states, individual queries, individual outputs. This chapter asks the global question: when do locally consistent structures combine into a globally coherent whole?

App. I gives the complete sheaf theory treatment

The mathematical language for this question is sheaf theory.

17.1 Local Consistency

A sheaf assigns data to each region of a space, together with restriction maps that say how data on larger regions constrains data on smaller regions. The key condition — the gluing condition — says that locally consistent data always determines a unique global datum.

Definition 17.1: Local Consistency (informal)

Data on overlapping regions U_i and U_j are *locally consistent* if their restrictions to the overlap $U_i \cap U_j$ agree: $s_i|_{U_i \cap U_j} = s_j|_{U_i \cap U_j}$.

Local consistency is a necessary condition for global coherence, but not sufficient. A collection of locally consistent data may fail to determine a unique global datum — this is an *obstruction*.

17.2 Global Coherence

The sheaf gluing theorem (Appendix I, Theorem .18) establishes the condition under which local consistency implies global coherence. For a sheaf F, locally consistent sections on a cover $\{U_i\}$ of U determine a unique global section $s \in F(U)$.

Example

Gesture recognition across sensors. A camera observes the spatial trajectory of the hand (local section on the visual domain). A keyboard observes the timing of key activations (local section on the timing domain). The two observations are locally consistent if there exists a plausible hand trajectory that would produce both the observed spatial path and the observed key timings. If such a trajectory exists, the global section (the complete gesture) is determined.

17.3 Knowledge Integration

Sheaf theory provides the correct framework for the problem of knowledge integration: combining information from multiple sources into a coherent whole.

Definition 17.2: Knowledge Sheaf

A *knowledge sheaf* is a sheaf F over a base space B of contexts (topics, domains, perspectives), where $F(U)$ is the set of knowledge structures consistent with context U.

Knowledge integration corresponds to finding global sections of the knowledge sheaf: consistent combinations of local knowledge across all contexts. Failures of knowledge integration — contradictions between domain experts, between theories, between cultural frameworks — are obstructions: failures of gluing.

17.4 User-Independent Generalization

AI Hallucination as Cohomological Failure

Language models hallucinate when they generate local sections that are individually coherent but globally contradictory — a failure of the sheaf gluing axiom. Consider an AI generating a biography with three local sections:

1. *"The subject was born in 1980."* $(s_1 \in F(U_1))$

2. *"The subject won a gold medal at the 1992 Olympics."* $(s_2 \in F(U_2))$

3. *"The subject was 25 years old when they won their first medal."* $(s_3 \in F(U_3))$
Each section is individually plausible. But the overlap constraints fail: $s_1|_{U_1 \cap U_2}$ requires age 12 in 1992; $s_3|_{U_2 \cap U_3}$ requires age 25 at first medal; these are incompatible. The system interpolated smoothly over a *cohomological hole* — a global section that does not exist because the local sections cannot be glued.
The HYDRA framework proposes a stack-theoretic remedy: instead of forcing a collapse to a single narrative, maintain a *groupoid of possibilities* — all locally consistent sections held simultaneously in suspension. Only collapse to a global section when the entropy field narrows enough to eliminate inconsistent branches. An AI built on this principle would recognize the age contradiction and refuse to glue rather than hallucinating a smooth but impossible biography.

One of the most important applications of sheaf theory in this framework is the problem of *user-independent generalization*: building recognition systems that work for all users, not just those in the training set.

Definition 17.3: User-Independent Sheaf

A *user-independent gesture recognition sheaf* is a sheaf F_{gesture} over the space of users, where $F_{\text{gesture}}(U)$ is the set of recognition functions that work for all users in U.

User-independent generalization corresponds to finding a global section of F_{gesture} — a single recognition function that works for all users simultaneously. This global section exists if and only if the local recognition functions (trained on subsets of users) are pairwise compatible on overlapping user groups.

⋆ **Remark**

Traditional machine learning approaches this problem with regularization and data augmentation — techniques that implicitly enforce local consistency. Sheaf theory makes the condition explicit: a recognition system generalizes to new users if and only if its behavior on known users is a consistent local section of the gesture sheaf.

The Gluing Principle for Knowledge

Coherent global knowledge is not the union of local knowledge. It is the gluing of locally consistent sections over an appropriate sheaf. Every genuine synthesis — scientific, cultural, personal — is a demonstration that locally consistent partial views can be extended to a globally coherent whole. Every genuine contradiction

is an obstruction that prevents this extension.

Exercise

Describe the knowledge sheaf for the problem of translating between two languages. What is the base space? What are the local sections? What would an obstruction look like (a local consistency failure)?

Exercise

In the IAD framework, the teacher's knowledge is a local section on the "easy" region of the query space; the student's self-knowledge is a local section on the "hard" region. When can these two local sections be glued into a global section? What prevents gluing? (Connect to the trust weight α.)

Mathematical

Define the first cohomology group $H^1(B, F)$ for a sheaf F over a base space B as the obstruction to gluing. (Look up the Čech cohomology construction.) What does a non-trivial H^1 mean for knowledge integration? Give an example of a knowledge problem with non-trivial H^1.

Part V

RSVP and Cosmological Accessibility

18

The Relativistic Scalar–Vector Plenum

Space is not a stage on which events occur.
Space is the record of all the events
that have already occurred.
— Flyxion, *Axioms for a Falling Universe*

The first four parts of this monograph developed the formal machinery of constraint spaces, Spherepop calculus, gesture theory, and admissibility. Part V applies this machinery to its most ambitious domain: the structure of the physical universe.

App. K gives the full field equations and action functional

The Relativistic Scalar–Vector Plenum (RSVP) is a field-theoretic framework for cosmology in which the universe is not an expanding container of matter but an *accessibility landscape* — a field of reachable futures that evolves by relaxation rather than expansion.

18.1 Historical Development

Standard cosmology rests on two pillars: the Friedmann equations (1922), which describe the expansion of a homogeneous universe, and the concordance ΛCDM model, which fits observational data by positing dark energy and dark matter as the dominant components of the cosmic energy budget.

The RSVP framework questions the foundational assumption behind both: that space is expanding. The observed redshift of distant galaxies, the cosmic microwave background, and the large-scale structure of the universe can be explained, the framework proposes, without expansion — through the *accessibility relaxation* of a plenum of interacting scalar and vector fields.

Historical Note

The idea that space might be a medium rather than an emptiness has a long history. Aristotle's *plenum* (no void; all space is filled with matter) was opposed by the Epicureans and later by Newton's absolute space. The luminiferous aether

of 19th-century physics was a return to plenum ideas — and was abandoned after the Michelson-Morley experiment. RSVP is not a return to the luminiferous aether. It proposes not a mechanical medium but a *field-theoretic* plenum: a collection of coupled scalar and vector fields that carry energy, information, and accessibility.

18.2 Core Fields: $(\Phi, \mathbf{v}, S)$

The RSVP state is a triple of fields $(\Phi, \mathbf{v}, S)$ defined over a spacetime manifold M.

Definition 18.1: RSVP Fields

- The *scalar density field* $\Phi : M \to \mathbb{R}_{\geq 0}$ represents the local density of organized structure — matter, information, coherent patterns.
- The *vector flow field* $\mathbf{v} : M \to TM$ represents directed transport of scalar density. It encodes the direction and rate of structural flow.
- The *accessibility entropy field* $S : M \to \mathbb{R}$ represents the logarithmic volume of admissible future configurations available from each spacetime point.

The three fields are coupled: Φ drives $\mathbf{v}$ through density gradients; $\mathbf{v}$ redistributes Φ through transport; S modulates both through accessibility gradients that bias flow toward regions with more admissible futures.

18.3 Entropy and Accessibility

In standard thermodynamics, entropy S measures disorder — the logarithm of the number of microscopic configurations consistent with a given macroscopic state. In RSVP, entropy is reinterpreted as *accessibility*: the logarithm of the volume of admissible future configurations.

This reinterpretation changes the meaning of the Second Law. The conventional Second Law states: entropy increases — systems become more disordered over time. The RSVP Second Law states: accessibility decreases — systems consume their future options over time.

Definition 18.2: RSVP Second Law

For an isolated RSVP system, the global accessibility entropy $S_{\text{global}}(t) = \int_M S(x,t)\, d^4x$ satisfies $\frac{d}{dt} S_{\text{global}} \leq 0$.

Accessibility decreases globally as the system evolves. This is consistent with the conventional Second Law (entropy increases in the conventional sense) because structures that form as accessibility decreases are low-entropy in the conventional sense: they are highly ordered, non-random configurations. The formation of structure *consumes* accessibility while *reducing* conventional entropy.

18.4 The RSVP Field Equations

The dynamics of the three fields are governed by coupled partial differential equations (Appendix K, Definitions K.7–K.11):

$$\frac{\partial \Phi}{\partial t} = -\nabla \cdot (\Phi \mathbf{v}) + \lambda \nabla \cdot (\Phi \nabla S) + Q_\Phi \tag{18.1}$$

$$\frac{\partial \mathbf{v}}{\partial t} + (\mathbf{v} \cdot \nabla)\mathbf{v} = -\nabla P + \nu \nabla^2 \mathbf{v} + \gamma \nabla S \tag{18.2}$$

$$\frac{\partial S}{\partial t} = D_S \nabla^2 S + R(\Phi, \mathbf{v}, S) \tag{18.3}$$

The key term is $\gamma \nabla S$ in (18.2): the vector field is driven by accessibility gradients. Flow moves toward regions of higher accessibility — this is the RSVP generalization of gravity.

18.5 Lamphron–Lamphrodyne Dynamics

Technical Note: The Friedmann Saddle and Closure Depth

The RSVP framework identifies the early universe as sitting near a *Friedmann saddle point* in the space of RSVP field configurations — a state of unstable equilibrium at coordinates $(S_m, v_m) = (4/3, 2/3)$ in the dimensionless entropy-flow parameter space. A saddle point is stable in some directions and unstable in others; the slightest perturbation causes the system to roll away.

The *closure depth* of this instability is exactly $d_{\text{closure}} = 2$: the full structure of the instability requires exactly two levels of analysis.

Level 1 (eigenvalue $\lambda_1 = -1$): Simple self-similar expansion. If this were the only mode, the universe would inflate uniformly and symmetrically forever — a featureless, structureless cosmos.

Level 2 (eigenvalue $\lambda_2 = -1/3$): Symmetry breaking. This fractional eigenvalue is the critical quantity. It represents the mode by which perfect uniformity cracks — the mathematical seed of all large-scale structure. Every galaxy, star, and planet is a downstream consequence of this level-2 instability breaking the Friedmann

saddle's perfect symmetry.
The closure depth of 2 means: look no further than the second eigenvalue. Everything that matters about why the universe is structured rather than uniform is encoded there.

The accessibility gradient field $\Lambda = \nabla S$ creates two types of regions in the RSVP plenum.

Definition 18.3: Lamphron and Lamphrodyne

A *lamphron* (λ_+) region is a local maximum of S: a region with high accessibility, from which the scalar field flows outward (accessibility sources). A *lamphrodyne* (λ_-) region is a local minimum of S: a region of low accessibility toward which flow converges (accessibility sinks).

Structure forms at lamphrodyne regions: as scalar density accumulates at accessibility sinks, it organizes into coherent patterns. The energy released by this organization (the decrease of S) drives further organization. Galaxies, stars, planets, and organisms are all lamphrodyne regions in the cosmological accessibility landscape.

Exercise

The RSVP Second Law states that global accessibility decreases. But the equation (18.3) has a reaction term $R(\Phi, \mathbf{v}, S)$. Under what conditions on R is the Second Law satisfied? Derive a sufficient condition on R for $\frac{d}{dt} S_{\text{global}} \leq 0$.

Exercise

Compare the RSVP field equations to the Navier–Stokes equations of fluid mechanics. Identify the corresponding terms. What does the accessibility gradient term $\gamma \nabla S$ correspond to in fluid mechanics, if anything? Is there a standard fluid-mechanical phenomenon that plays a similar role?

Cosmological

In standard cosmology, the cosmic microwave background (CMB) is explained as the relic radiation from a hot early universe. In the RSVP framework, what is the corresponding interpretation of the CMB? (Hint: what would the accessibility landscape look like in the early universe, and what observational signatures would its relaxation produce?)

19

Accessibility Relaxation

The universe does not expand
into anything.
It relaxes
away from tension.
— Flyxion, *Axioms for a Falling Universe*

Standard cosmology explains the redshift of distant galaxies through the expansion of space: the fabric of spacetime stretches, carrying galaxies apart and stretching the wavelengths of photons traveling between them. This chapter develops the RSVP alternative: *accessibility relaxation*, in which redshift arises not from spatial expansion but from the progressive decrease of accessibility entropy along cosmological light paths.

App. J §J.21 on accessibility relaxation flows

19.1 Replacing Expansion

Worked Example: Two Falsifiable Predictions of RSVP Cosmology

The RSVP framework is not merely a reinterpretation of existing observations — it makes specific predictions that differ numerically from ΛCDM.

Prediction 1: The third-order redshift-luminosity coefficient. The coefficient c_3 in the Taylor expansion of the redshift-luminosity relation measures how cosmic "acceleration" varies with distance.

- ΛCDM predicts: $c_3 \approx -0.1804$ (negative)
- RSVP predicts: $c_3 \approx +2.3591 + \delta_{\Phi,v}$ (positive)

where $\delta_{\Phi,v}$ is a small correction from the Φ-**v** coupling. The sign difference is decisive: point telescopes at deep-field supernovae, measure c_3, and one of the two frameworks is immediately falsified.

Prediction 2: Non-zero redshift-birefringence cross-correlation. In an empty-vacuum cosmology, the stretching of light (redshift) and the twisting of light's polarization (birefringence) are independent phenomena. RSVP predicts they are

correlated, because both arise from the same underlying entropy-vorticity coupling in the lamphrodyne flow field $\mathbf{v}$:

$$\langle \delta z(\hat{n})\, \delta\alpha(\hat{n}') \rangle \neq 0$$

where δz is the redshift perturbation and $\delta\alpha$ is the birefringence angle. This cross-correlation is zero by symmetry in ΛCDM. Missions such as *Euclid* or the *Nancy Grace Roman Space Telescope* will measure this directly.
If either prediction holds, the relaxing-spring picture is confirmed. If both fail, the RSVP framework requires fundamental revision.

The Hubble relation $v = H_0 d$ (recession velocity proportional to distance) is observational. Its *interpretation* as spatial expansion is theoretical. RSVP proposes a different interpretation: the Hubble relation reflects a gradient in the accessibility entropy field S, not an expansion of space.

Definition 19.1: RSVP Hubble Relation

In the RSVP framework, the observed redshift of a photon traveling from source to observer along path γ is:

$$z = \int_\gamma \alpha \cdot |\nabla S|\, dl$$

where α is a coupling constant and $|\nabla S|$ is the magnitude of the accessibility gradient along the photon path.

This replaces the geometric interpretation (space is stretched) with a field-theoretic one (photons lose energy as they traverse accessibility gradients). The two interpretations are empirically distinguishable: the RSVP interpretation predicts a specific relationship between redshift, cosmic structure (which determines $|\nabla S|$), and direction (accessibility gradients are not isotropic on small scales).

19.2 Accessibility Gradients

The accessibility gradient ∇S is the key dynamical object in RSVP cosmology. It determines:

- The direction of cosmological flow (matter flows toward accessibility sinks).
- The magnitude of cosmological redshift (photons lose energy proportional to the gradient they traverse).
- The formation of large-scale structure (filaments and voids form along accessibility

ridges and wells).

Definition 19.2: Accessibility Gradient Cosmology

An *accessibility gradient cosmology* is a RSVP model in which the large-scale behavior of the universe is determined by the gradient field ∇S rather than by a metric expansion parameter $a(t)$.

19.3 Entropic Smoothing

Over cosmological time, the accessibility entropy field S tends to smooth: sharp gradients diffuse, accessibility wells fill, and the landscape approaches a flatter configuration. This is *entropic smoothing* — the RSVP version of the heat death of the universe.

Definition 19.3: Entropic Smoothing

Entropic smoothing is the long-time behavior of the accessibility field under the diffusion term $D_S \nabla^2 S$ in the S-field equation. As $t \to \infty$, $S \to S_\infty$ (a constant), and $\nabla S \to 0$.

The approach to S_∞ represents the exhaustion of accessible futures: all structures have formed, all accessible configurations have been reached, all gradients have been eliminated. This is the RSVP interpretation of the heat death: not maximum disorder, but minimum accessibility gradient — a state with nowhere left to flow.

19.4 Lamphron–Lamphrodyne Dynamics Revisited

The lamphron–lamphrodyne distinction of Chapter 18 is central to understanding the formation and dissolution of cosmic structures.

Lamphron regions (accessibility maxima) are sources: they drive flow outward, pushing scalar density toward lamphrodyne sinks. As matter accumulates at lamphrodyne sinks, it forms structures. As structures form, the local S decreases (accessibility is consumed), eventually turning the lamphrodyne region into a lamphron as the structure radiates energy into its environment.

This cycle — lamphron drives flow to lamphrodyne, lamphrodyne forms structure, structure radiates and becomes lamphron — is the RSVP account of the stellar life cycle, galactic evolution, and potentially the life cycle of the universe as a whole.

Exercise

Derive the entropic smoothing timescale: the characteristic time $\tau_S = L^2/D_S$ for accessibility gradients of length scale L to diffuse under the equation $\partial_t S = D_S \nabla^2 S$. What physical observable corresponds to D_S in the RSVP framework?

Exercise

In standard cosmology, the Hubble constant H_0 has units of inverse time (km/s/Mpc). In the RSVP Hubble relation, the coupling constant α and the accessibility gradient $|\nabla S|$ must combine to give units of inverse length. What are the units of $|\nabla S|$ and α separately?

20

The Fall of Space

Gravity is not a force pulling things together.
It is the geometry of where futures are.
— Flyxion, *Axioms for a Falling Universe*

This chapter develops the most radical claim of the RSVP framework: that space itself is a dynamical entity that "falls" — relaxes toward configurations of lower constraint tension. Gravity, in this picture, is not a fundamental force but an emergent consequence of accessibility geometry.

RSVP accessibility as emergent gravity; connects to Verlinde (2011)

20.1 Space as Relaxation

In general relativity, gravity is spacetime curvature. Matter curves spacetime; curved spacetime deflects matter. The relationship is geometric and exact.

In RSVP, gravity is an *emergent* phenomenon: the apparent attraction between massive bodies is the result of both bodies flowing toward the same accessibility sink. They do not attract each other; they are both attracted by the same accessibility gradient.

Definition 20.1: Emergent Gravitational Acceleration

In the RSVP framework, the acceleration of a test mass at position x is:

$$\mathbf{a}(x) = \gamma \nabla S(x)$$

where γ is the coupling constant and $\nabla S(x)$ is the accessibility gradient at x.

This is formally identical to the RSVP vector field equation's accessibility driving term (Chapter 18, Eq. 18.2). The accessibility gradient plays the role of the gravitational potential gradient $-\nabla \Phi_{\text{grav}}$ in Newtonian gravity.

20.2 Structure Without Expansion

A major challenge for any non-expanding cosmology is explaining the observed large-scale structure: why matter is concentrated in filaments, sheets, and clusters rather than distributed uniformly.

In RSVP, structure formation is explained by accessibility landscape topography: matter flows toward lamphrodyne regions (accessibility sinks), creating the observed filamentary structure. The cosmic web emerges not from gravitational instability in an expanding medium but from accessibility gradient flow in a relaxing plenum.

Definition 20.2: Cosmic Web in RSVP

The *cosmic web* in the RSVP framework is the network of lamphrodyne regions (accessibility sinks) connected by accessibility ridges along which matter flows. Voids correspond to lamphron regions (accessibility maxima) from which matter has been driven away.

20.3 Constraint Descent

The "fall of space" metaphor captures the RSVP picture precisely: the universe does not expand outward; it descends along constraint gradients. Every constraint that can be relaxed is relaxed. Every structure that can form does form, because structure formation reduces constraint violation at the local level (forming a stable configuration from an unstable one).

The Constraint Descent Cosmology Principle

In the RSVP framework, cosmic evolution is constraint descent: the universe evolves by continuously reducing its total constraint violation functional $\int_M \kappa(\Phi, \mathbf{v}, S)\, d^4x$. Gravity, structure formation, the arrow of time, and the eventual heat death are all consequences of this descent. Space does not expand; it falls.

20.4 Observable Consequences

The RSVP framework makes specific predictions that differ from standard cosmology:

1. **Redshift-structure correlation:** redshift should correlate with local accessibility gradient magnitude, not just distance. Regions of high local structure density should show systematic redshift deviations.

2. **Anisotropic redshift:** photons traveling along accessibility ridges should show different redshifts than photons traversing voids, even at the same distance.
3. **No dark energy:** the accelerating expansion attributed to dark energy in standard cosmology is reinterpreted as increasing accessibility gradient magnitude in the late universe.

Exercise

In Newtonian gravity, the gravitational potential Φ_{grav} satisfies $\nabla^2 \Phi_{\text{grav}} = 4\pi G\rho$ (Poisson equation). In RSVP, if $\mathbf{a} = \gamma \nabla S$, what equation does S satisfy in the Newtonian limit? Is it the same as Poisson's equation? What is the RSVP analog of the density ρ?

Exercise

Verlinde (2011) proposed that gravity is an entropic force arising from the holographic principle. Compare this to the RSVP accessibility gradient interpretation. Where do the two proposals agree? Where do they differ?

21

Cosmology as Accessibility Geometry

The universe is not a thing in space.
It is the space of all things
that could have been
and the record of which ones were.
— Flyxion, *Axioms for a Falling Universe*

This final chapter of Part V synthesizes the RSVP framework into a complete cosmological picture and connects it to the broader themes of the monograph: accessibility, constraint, projection, and collapse.

Synthesizes Parts I–V; connects to Part VI on consciousness

21.1 Universes as Accessibility Landscapes

The central claim of RSVP cosmology is that the universe is, at the most fundamental level, an accessibility landscape: a field $S(x, t)$ that evolves by relaxation, and from which all observable structure emerges as a consequence of this evolution.

Definition 21.1: Universe as Accessibility Landscape

An *RSVP universe* is a spacetime manifold M equipped with a triple of fields $(\Phi, \mathbf{v}, S)$ satisfying the RSVP field equations (Chapter 18), together with initial conditions at some reference time t_0 and boundary conditions at spatial infinity.

The "history" of the universe is the trajectory of $(\Phi, \mathbf{v}, S)$ through field configuration space. The "arrow of time" is the direction of decreasing global accessibility S_{global}. The "heat death" is the limit $S_{\text{global}} \to S_\infty$ (constant, $\nabla S \to 0$).

21.2 The Hourglass and Logarithmic-Time Sketches

The hourglass diagram that appears in early sketches of this framework captures the accessibility landscape interpretation visually: the narrow neck of the hourglass is the

big bang (maximal accessibility, minimal structure); the widening lower half is the early universe (accessibility decreasing, structure forming); the narrowing upper half is the late universe (accessibility approaching zero, all futures exhausted).

The logarithmic-time sketch complements this: on a logarithmic time axis, the universe's history is divided into epochs of approximately equal logarithmic duration. Each epoch corresponds to a qualitative change in the accessibility landscape — from the quantum epoch through nucleosynthesis, recombination, large-scale structure formation, stellar evolution, and finally the approach to heat death.

21.3 Past and Future as Topological Sectors

Historical Note

The Orphic Egg and the Babylonian Toothworm. Ancient mythological traditions encoded the RSVP cosmological picture with striking precision, long before the mathematics existed to formalize it.

The *Orphic Egg* — a primordial egg resting in the void from which the radiant deity Phanes (or Protogonus) violently emerges — maps directly onto the Friedmann saddle. The egg is the universe in its maximally symmetric, maximally constrained initial state: perfect, frozen, static. The violent shattering is the saddle breaking — the level-2 eigenvalue ($\lambda_2 = -1/3$) cracking the uniform expansion and seeding all structure. From the fragments: the gods (Hera, Poseidon, Pluto) represent the accessible states — air, water, earth — into which the plenum relaxes.

Even more precise is the *Babylonian Toothworm*: the ancient Mesopotamian deity who rejects all the gifts of the created order (the fig, the apricot, the date) and demands instead to dwell "between tooth and gum, sucking the tooth's blood and devouring the gum." The Toothworm represents the *excluded region* — the instability that refuses to fit the perfect frozen symmetry. It corresponds to the eigenvalue mode that breaks the Friedmann saddle: not the uniform expansion (which is tidy and symmetric) but the fractional $-1/3$ mode that is messy, that disrupts, that causes pain.

The mythological judgment is the same as the mathematical one: "Without disruption, there is no becoming. The last child teaches the universe to move." Instability is not a defect to be corrected — it is the necessary engine of structure formation. The toothworm is the crack in the perfect ice through which life flows.

Definition 21.2: Topological Time

In the RSVP framework, *past* and *future* are topological sectors of the accessibility landscape:

- The *past sector* is the set of states that have already been visited — states in the action history $\mathcal{H}_t$ (Chapter 9). These are the committed, irreversible configurations.
- The *future sector* is the admissible future set $\mathcal{A}_H(x)$ — states reachable from the present.

The boundary between past and future is the present moment: the current field configuration.

This topological picture dissolves a traditional puzzle: why is the past fixed while the future is open? In RSVP, the answer is structural: the past sector is the set of states that have been committed (popped, in Spherepop terms); the future sector is the set of states that remain accessible. The asymmetry is not mysterious — it is the asymmetry between the committed and the uncommitted.

21.4 Heat Death as Accessibility Collapse

Technical Note: Positive Geometry and RSVP — Bridging the Scales

The RSVP framework connects the cosmological (Part V) to the quantum (the positive geometry program of Arkani-Hamed and collaborators) through a precise duality.

The positive geometry discovery: Arkani-Hamed showed that quantum scattering amplitudes — the probabilities of particle interactions — can be computed as the volumes of purely geometric objects in kinematic space: the *amplituhedron*, *associahedron*, and *cosmological polytope*. These shapes sit outside space-time; their volumes encode all the physics without any virtual particles, any quantum field theory Lagrangian, or any space-time manifold.

What positive geometry leaves unexplained: Where do these shapes come from? Arkani-Hamed postulates them as static mathematical objects in an abstract realm. The shapes are beautiful, but their origin is unaddressed.

The RSVP answer: These geometric shapes are not static primitives — they are the *invariant endpoints* of irreversible constraint-driven dynamics. The RSVP universe, relaxing from the Friedmann saddle, accumulates history irreversibly. The configurational entropy field S forces increasing commitment with each passing moment (Spherepop action history, Chapter 9). The positive geometry shapes are what

fall out when you ask: *what geometric objects survive the irreversible accumulation of physical history?*
Formally:

$$\text{Static positivity (Arkani-Hamed)} \longleftrightarrow \text{Dynamic irreversibility (RSVP)}$$

Admissibility governs *configurations*; irreversibility governs *transitions*. The amplituhedron is the static fossil; the RSVP history is the process that produced it.
The tagline from the cosmology texts: *"Combinatorics is the residue of irreversibility."* The combinatorial richness of positive geometry is not a mathematical coincidence — it is what irreversible constraint dynamics leaves behind.

Definition 21.3: Heat Death in RSVP

The *heat death* in the RSVP framework is the state in which S_{global} has reached its minimum possible value: all accessibility has been consumed, $\nabla S = 0$ everywhere, and no further structure formation or evolution is possible.

This is not a state of maximum disorder in the conventional thermodynamic sense. It is a state of *minimum gradient*: all accessibility differences have been smoothed out, all flows have ceased, and the field configuration is stationary. Structures may still exist (the universe is not homogeneous at heat death); they simply cannot evolve.

The Cosmological Accessibility Principle

The history of the universe is the history of decreasing accessibility. Stars, galaxies, planets, organisms, and civilizations are the structures that form as accessibility is consumed. They are the foam on the surface of a sea that is gradually becoming still. The universe is not expanding into a future — it is collapsing toward its own canonical form.

Exercise

Compare the RSVP heat death (minimum $|\nabla S|$, zero flows) to the conventional thermodynamic heat death (maximum entropy, thermal equilibrium). Are they equivalent descriptions of the same final state? Or do they predict different final configurations?

Exercise

The Poincaré recurrence theorem states that any bounded Hamiltonian system returns arbitrarily close to its initial state after a sufficiently long time. Is the RSVP universe subject to Poincaré recurrence? What would recurrence mean in terms of the accessibility landscape?

Synthesis

Review the five frameworks of this monograph (Spherepop, Gesture, Admissibility, RSVP, Semantic Infrastructure) and identify the common mathematical object in each. Specifically, identify what plays the role of: (a) the state space X, (b) the constraint functional κ, (c) the admissible set A, (d) the collapse map $\mathcal{K}$, and (e) the accessibility entropy S in each of the five frameworks.

Part VI

Consciousness and Semantic Fields

22

Simulated Agency

Consciousness is not the light that illuminates the room.
It is the process by which the room decides
which lights are worth keeping on.
— Flyxion, *Semantic Infrastructure*

Part V ended with the universe as an accessibility landscape. Part VI begins with the question that this raises immediately: what is it for a *part* of the universe to model the *rest* of the universe? What is it for a physical system to represent, predict, and act?

App. L for semantic fields and simulated agency; connects to IAD framework

This is the question of agency. And the central argument of this chapter is that agency — including conscious agency — is best understood not as a special substance or emergent property but as a *projection-based inference process*: a system that constructs sparse internal simulations of its environment and navigates those simulations using accessibility gradients.

22.1 Projection-Based Consciousness

The projection framework of Appendix B and Chapter 16 gives us the right starting point. An agent A embedded in an environment E has access not to E directly but to a projection:

$$O = \Pi_A(E) \in \mathcal{O}_A$$

where $\mathcal{O}_A$ is the agent's observation space. The agent's observation is always a fiber: many environmental states are consistent with any given observation.

Definition 22.1: Projection-Based Agent

A *projection-based agent* is a tuple $(E, \Pi_A, \hat{E}_A, \mathcal{P}_A)$ where:

- E is the environment state space,
- $\Pi_A : E \to \mathcal{O}_A$ is the agent's observation projection,

- $\hat{E}_A$ is the agent's internal model space (simulations),
- $\mathcal{P}_A : \mathcal{O}_A \to \Delta(\hat{E}_A)$ is the agent's posterior map — assigning a distribution over internal models to each observation.

Consciousness, in this picture, is the process of maintaining and updating $\mathcal{P}_A$ — the distribution over internal simulations consistent with current observations. The agent is not directly conscious of E; it is conscious of its *best current simulation* of E.

Conceptual Aside: The Simulation Hypothesis Inverted

The popular "simulation hypothesis" asks whether we might be living in a simulation run by some external intelligence. The projection-based view inverts this: every agent is *already* living in a simulation — specifically, the internal model $\hat{E}_A$ that its own cognitive processes maintain. The question is not whether we live in a simulation but how faithfully our internal simulation tracks the external environment.

This inversion has practical consequences. Hallucination, delusion, and confabulation are not pathological departures from direct perception — they are normal features of the simulation process when internal models diverge from external states faster than they can be corrected. Perception is always inference from projections; the question is how well-constrained the inference is.

22.2 Sparse Inference

A key feature of the projection-based framework is that internal models are necessarily *sparse*: they cannot represent the full complexity of E, but only the features relevant to the agent's current goals and constraints.

Definition 22.2: Sparse Internal Model

An internal model $\hat{e} \in \hat{E}_A$ is *k-sparse* if it specifies at most k degrees of freedom of the environment, with all other degrees left implicit (marginalized over). The *sparsity ratio* is $k/\dim(E)$.

For a human agent, $\dim(E)$ is astronomical — every particle in the observable universe — while k is of order 10^2 to 10^4 (the number of features we are consciously tracking at any moment). The sparsity ratio is essentially zero. We are always inferring an astronomically sparse sketch of reality.

CLIO (Chapter 15) explains why this works: constraint structure allows sparse represen-

tations to be sufficient for decision-making. The agent does not need to know everything about E; it only needs to know which features of E constrain its available actions and their consequences.

22.3 The IAD Correspondence

The Introspective Adversarial Distillation framework illuminates a key feature of mature agency: the transition from external-authority-driven to self-consistency-driven cognition.

In the IAD framework, the trust weight $\alpha = P_{\text{teacher}}(y \mid x_{\text{adv}})^{\beta}$ modulates how much a student network defers to its teacher versus its own prior beliefs. When the teacher is reliable, $\alpha \approx 1$ and external authority dominates. When the teacher fails on the student's own adversarial examples, $\alpha \to 0$ and self-consistency takes over.

Definition 22.3: Cognitive Authority Transition

An agent undergoes a *cognitive authority transition* when its self-generated model $\hat{E}_A^{\text{self}}$ becomes more reliable than its externally-provided model $\hat{E}_A^{\text{ext}}$ in some region of its observation space.
In RSVP terms, the total flow is:

$$\mathbf{v}_{\text{total}} = \alpha(x)\,\mathbf{v}_{\text{ext}} + (1 - \alpha(x))\,\mathbf{v}_{\text{self}}$$

where $\alpha(x)$ is a local trust measure over the semantic manifold.

This formalizes a deep observation about cognitive development. Children begin in a high-α regime — high deference to parents, teachers, and authority. As they develop their own models of the world through experience, α decreases in regions where their model outperforms the external authority's. Expertise is the accumulation of low-α regions — domains where self-generated models dominate.

22.4 Latent Worlds

The most striking implication of projection-based consciousness is that the agent's experienced world is always a latent construct: a low-dimensional reconstruction of a high-dimensional reality, filtered through the agent's specific projection Π_A.

Definition 22.4: Latent World

The *latent world* of agent A at time t is the distribution $\mathcal{P}_A(O_t) \in \Delta(\hat{E}_A)$ over internal models consistent with the current observation $O_t = \Pi_A(E_t)$. The agent's *experienced world* is the mode or expectation of this distribution.

Two agents with different projection maps $\Pi_A \neq \Pi_B$ will construct different latent worlds from the same environment E. This is not relativism — the environment E is shared and objective — but it does imply that *what is salient* differs systematically across agents with different sensory and cognitive projections.

Example

A bat and a human share the same physical environment. The bat's projection Π_{bat} emphasizes high-frequency acoustic structure; the human's projection Π_{human} emphasizes low-frequency visual structure. The bat's latent world contains rich detail about insect wing-beat frequencies; the human's contains rich detail about color and shape. Neither is more accurate — both are faithful sparse reconstructions of different projections of the same environment.

22.5 Consciousness as Accessibility Navigation

The RSVP accessibility framework (Chapters 14, 21, Appendix J) suggests a specific functional role for consciousness. Rather than being epiphenomenal or merely an observer, consciousness is the agent's accessibility navigation system: the process by which the agent moves through its latent world in ways that preserve and expand future admissible states.

The Consciousness-as-Navigation Hypothesis

Conscious processing preferentially explores regions of the agent's latent world $\hat{E}_A$ that maximize the expected accessibility entropy of the agent's future states:

$$a^* = \arg\max_{a \in \mathcal{A}(x)} \mathbb{E}[S_A(x_{t+1}) \mid x_t = x, a_t = a]$$

Consciousness is the computational substrate for this maximization. Attention is the selection of features of $\hat{E}_A$ most relevant to accessibility navigation.

This is not a complete theory of consciousness — it says nothing about the phenomenal or subjective character of experience. But it offers a *functional* definition that is both precise and testable: a system is conscious to the degree that it navigates its latent world

using accessibility gradients rather than fixed reflex arcs.

Exercise

Define a formal measure of "consciousness" for a projection-based agent as the mutual information between the agent's action sequence and its accessibility entropy trajectory. Show that reflex-arc agents (agents with fixed stimulus-response maps) have zero mutual information by this measure. What is the measure for an optimal accessibility-maximizing agent?

Exercise

The IAD trust weight $\alpha(x)$ is locally computed — it depends on the teacher's reliability at the specific query x. Extend this to the cognitive authority transition: define a local trust measure $\alpha_A(x)$ for a human agent over the semantic manifold M_s. What observational data would allow α_A to be estimated from behavior?

Open problem

Pearce's zero ontology proposes that the universe has zero net information content: $\sum_i \psi_i = 0$. If this is true, what is the information content of a specific agent's latent world $\hat{E}_A$? Can a zero-information universe contain non-zero information latent worlds? (Hint: consider the relationship between global information content and local conditional information content relative to a specific projection.)

23

Chain of Memory

You are not the sum of your memories.
You are the process that generates
the next memory from the last.
— Flyxion, *Semantic Infrastructure*

Chapter 22 established that an agent's experienced world is a latent construct — a sparse simulation maintained over time. This chapter examines the temporal dimension of this process: how the simulation persists, how it is updated, and what it means for an agent to have a continuous identity through time.

App. L §L.22 on the chain of memory; connects to Appendix M on composition

The key claim is that memory is not storage but *constraint preservation*: identity over time is not the persistence of a fixed data structure but the continuity of a process that generates each moment from the constraints established by previous moments.

23.1 Memory as Constraint Preservation

The conventional picture of memory is archival: experiences are encoded, stored, and later retrieved. This picture is demonstrably false in its details — human memory is reconstructive, not reproductive; it is influenced by subsequent experience, current mood, and retrieval context in ways that no archive would permit.

The constraint-preservation picture is more accurate. What persists is not a record of the experience but a *modification of the constraint structure* governing future experience.

Definition 23.1: Constraint-Preserving Memory

A *constraint-preserving memory system* is a dynamical system $(X, \mathcal{C}, \tau)$ where:

- X is the agent's state space,
- $\mathcal{C}(t)$ is the active constraint set at time t,
- $\tau : \mathcal{C}(t) \times E_t \to \mathcal{C}(t+1)$ is the constraint update function that integrates new experience E_t into the existing constraint structure.

A *memory* of event E_t is the modification $\Delta\mathcal{C} = \mathcal{C}(t+1) - \mathcal{C}(t)$ that E_t induces — the additional constraints it adds.

Under this definition, forgetting is constraint relaxation: the constraint modification induced by E_t decays over time, gradually losing its influence on the active constraint set. A vivid memory is a strong, persistent constraint modification; a faded memory is a weak, partially decayed one.

Historical Note

Ibn Rushd's (Averroës) commentary on Aristotle's *De Memoria* distinguishes between the *form* of a memory (its content) and the *material disposition* (the physical substrate altered by experience). The constraint-preservation view maps onto this distinction: the constraint modification $\Delta\mathcal{C}$ is the material disposition; the experience E_t it was derived from is the form. What persists is the disposition — the constraint — not a reproduction of the original experience.

23.2 Trajectory Reconstruction

Illustration: Memory as Stabilized Field Residue

The HYDRA framework for cognitive field theory offers a vivid implementation of memory-as-constraint-preservation.

When an experience is sufficiently salient — high emotional or semantic weight — it does not merely pass through the cognitive manifold and vanish. It deposits a *stabilized field residue*: a persistent standing wave in the scalar field Φ_s with four properties:

- **Amplitude:** the intensity or salience of the memory. High-amplitude residues (traumatic events, moments of insight) persist for decades; low-amplitude residues decay in days.
- **Frequency:** the semantic content — the specific conceptual "pitch" that the memory encodes.
- **Phase:** alignment with the vector flow $\mathbf{v}_s$, determining associative links to neighboring memories.
- **Decay rate:** governed by the entropy field S_s. High-entropy residues (vague, unfocused) decay quickly; low-entropy residues (tightly constraining future thoughts) persist.

Crucially, *retrieval is resonance, not lookup*. When you try to remember something,

the cognitive system broadcasts a retrieval cue — a probe wave at a specific frequency. Standing waves in the manifold that resonate with the probe's frequency and phase amplify; those that do not, remain silent. The memory is reconstructed through geometric resonance, not address-based fetch.
This explains why retrieval is context-sensitive: the echo is shaped by the current state of the cognitive field. The same cue broadcast in different emotional or cognitive states produces different resonances, which is why the same event can be "remembered" differently at different times. Memory was never a fixed record — it was always a reconstruction shaped by the current geometry.
This also explains the cascade structure of memory loss in dementia: the standing waves are not deleted but progressively lose amplitude and phase coherence, so retrieval cues find weaker, blurrier resonances rather than sharp, precise ones.

Memory allows the agent to reconstruct not just past events but past trajectories — the paths through state space that led to the current moment.

Definition 23.2: Trajectory Reconstruction

Given the current constraint set $\mathcal{C}(t)$ and the current state $x(t)$, *trajectory reconstruction* is the inverse inference problem: find the distribution over past trajectories $\{\gamma : [0, t] \to X\}$ consistent with $\mathcal{C}(t)$ and $x(t)$.

This is the memory-as-inverse-inference picture. Remembering is not retrieval from an archive but reconstruction from current constraints. The constraints encode what the past *must have been like* to produce the current state — not what it actually was.

This explains why memories are malleable. Adding new constraints (learning new facts, having new experiences, being exposed to suggestion) changes the inverse inference problem and therefore changes what is "remembered." The memory was never fixed — it was always a reconstruction.

23.3 Identity Over Time

If memory is constraint preservation rather than archival, then personal identity over time is a different kind of thing than is usually assumed.

Definition 23.3: Process Identity

An agent has *process identity* over an interval $[t_0, t_1]$ if there exists a continuous trajectory $\gamma : [t_0, t_1] \to X$ such that the agent's constraint set $\mathcal{C}(t)$ evolves contin-

uously along γ — each constraint state is reachable from the previous one by a single constraint-update step.

Process identity does not require that the agent's state be the same at t_0 and t_1 — it only requires that the states be connected by a continuous chain of constraint updates. A person who changes their beliefs, values, and memories radically over decades still has process identity if each step in the change is a continuous constraint modification.

⋆ **Remark**

This gives a precise answer to the Ship of Theseus problem for personal identity. The question is not whether any particular component (memory, belief, personality trait) persists unchanged, but whether the sequence of constraint updates connecting the earlier and later person is continuous. A gradual change that preserves process identity is "the same person"; a discontinuous jump (severe amnesia, radical personality change from brain injury) may break process identity.

23.4 The Chain Operator

The formal structure of memory as constraint preservation is captured by the *chain operator*: the composition of all constraint updates from the agent's origin to the present.

Definition 23.4: Chain Operator

The *chain operator* at time t is

$$\mathcal{C}(t) = \tau^{(t)} \circ \tau^{(t-1)} \circ \cdots \circ \tau^{(0)}(\mathcal{C}_0)$$

where $\mathcal{C}_0$ is the initial constraint set and each $\tau^{(s)} = \tau(\cdot, E_s)$ is the constraint update induced by experience E_s.

The chain operator makes explicit that the current constraint set is the accumulated product of all past experiences — not stored individually but composed into a single operator. The chain *is* the memory; individual memories are the factors.

Theorem 23.1: Composition Determines State

The agent's current state $x(t)$ is a function of $\mathcal{C}(t)$ and the current observation O_t: $x(t) = f(\mathcal{C}(t), O_t)$. Therefore the agent's state is entirely determined by the chain

of past experiences and the current observation — nothing more.

Proof. By induction: the initial state $x(0) = f(\mathcal{C}_0, O_0)$ is determined by initial constraints and initial observation. Each subsequent state $x(t+1) = f(\mathcal{C}(t+1), O_{t+1}) = f(\tau(\mathcal{C}(t), E_t), O_{t+1})$ is determined by the previous constraint set (which by induction encodes all previous experiences), the current experience, and the current observation. ■

23.5 Collective Memory and Semantic Infrastructure

The chain-of-memory framework extends naturally from individual agents to collective systems. A civilization's collective memory is the chain of constraint updates accumulated through institutions, documents, practices, and traditions.

Definition 23.5: Civilizational Memory Chain

A *civilizational memory chain* is a chain operator $\mathcal{C}_{\text{civ}}(t)$ defined over a community of agents $(A_1, \dots, A_n)$ with shared constraint update mechanisms: transmission (communication), storage (writing, recording), and revision (scholarship, reinterpretation).

The fragility of civilizational memory corresponds to breaks in this chain: the burning of libraries (Alexandria), the suppression of languages, the erasure of traditions. Each break is a discontinuity in the chain operator — the accumulated constraints of previous generations failing to propagate to the next.

The semantic infrastructure of Chapter 25 and Appendix M is the engineering of civilizational memory chains: the design of transmission, storage, and revision mechanisms that preserve constraint continuity across generations.

Exercise

Formalize "forgetting" as a constraint-relaxation operator: $F_\lambda(\mathcal{C}) = \{c \in \mathcal{C} : \text{strength}(c) > \lambda\}$ where λ is a forgetting threshold. Show that the Ebbinghaus forgetting curve (exponential decay of memory strength) corresponds to a specific choice of strength decay dynamics.

Exercise

Two agents A and B begin with the same initial constraint set $\mathcal{C}_0$ but undergo different experience sequences. Define a metric $d(\mathcal{C}_A(t), \mathcal{C}_B(t))$ measuring how far apart their constraint sets have diverged at time t. Under what conditions does this divergence grow unboundedly? Under what conditions do the constraint sets reconverge?

Philosophical

The Buddhist concept of *anattā* (non-self) holds that there is no persistent, unchanging self — only a stream of causally connected mental events. Is this compatible with process identity as defined above? Does process identity require a "self," or is it precisely the formal structure that makes non-self coherent?

24

Meaning as Geometry

Meaning is not what a symbol points to.
Meaning is the shape of the region
from which the symbol cannot escape.
— Flyxion, *Semantic Infrastructure*

The previous two chapters developed the agent's internal world as a latent simulation (Chapter 22) and the temporal structure of that simulation as a memory chain (Chapter 23). This chapter asks: what is *meaning* in this framework?

Connects to App. L §L.23 and the RSVP semantic field equations

The answer is geometric. Meaning is not a correspondence relation between symbols and objects (the referential theory), nor is it a use-pattern (the Wittgensteinian theory), nor is it a mental representation (the cognitive theory). It is a geometric structure in the accessibility landscape: the shape of the constraint basin that a semantic unit inhabits.

24.1 Semantic Fields

In the RSVP framework, meaning lives in a semantic manifold M_s — the space of possible semantic states — equipped with an accessibility entropy field $S_s : M_s \to \mathbb{R}$ (Appendix L).

Definition 24.1: Semantic Field

The *semantic field* of a symbol σ is the region of the semantic manifold M_s consistent with σ:

$$\mathcal{F}(\sigma) = \{m \in M_s : \Phi_s(\sigma, m) \geq \tau\}$$

where $\Phi_s : \Sigma \times M_s \to [0, 1]$ is the compatibility function (how well semantic state m is expressed by symbol σ) and τ is a compatibility threshold.

The semantic field is not a point but a region. The word "tree" has a semantic field that includes all semantic states involving tree-like things: oaks, concepts of trees, tree-shaped

graphs, decision trees, family trees. The boundary of this field — where $\Phi_s(\sigma, m) = \tau$ — is the edge of the symbol's meaning.

24.2 Qualia as Invariants

The hardest problem of consciousness is the problem of *qualia*: why does red look like red? Why does pain feel like pain? Why is there "something it is like" to experience these things?

The geometric framework offers a partial answer. Qualia are not properties of the environment or of symbols — they are *invariants of the agent's projection structure*.

Definition 24.2: Quale as Projection Invariant

A *quale* associated with stimulus class S is a property of the agent's projection Π_A that is invariant across all stimuli in S: it is preserved by Π_A for all $e \in S$ and varies across different stimulus classes. Formally, it is an element of the fiber $\ker(\Pi_A|_S)^\perp$ — the component of the projection that distinguishes S from other classes.

Red looks like red because the quale of redness is an invariant of the human visual projection Π_{human} for wavelengths near 700nm. It is not a property of the wavelength itself — other projections (other species' visual systems) have different invariants for the same wavelength. The quale is the agent-specific structure that the projection extracts.

> ⋆ **Remark**
>
> This does not solve the hard problem — it relocates it. We still do not know why projection invariants have subjective character at all. But it does explain the *structure* of qualia: why they are stable (invariance under stimulus variation), agent-specific (depend on Π_A), and incommunicable (fibers of projections are invisible to other agents with different projections).

24.3 Constraint Basins

The most powerful geometric concept for meaning is the *constraint basin*: the region of the accessibility landscape that a semantic state is drawn toward by the accessibility gradient flow.

Definition 24.3: Constraint Basin

The *constraint basin* of a semantic attractor $m^* \in M_s$ is the set of initial states from which the accessibility gradient flow converges to m^*:

$$\mathcal{B}(m^*) = \{m \in M_s : \lim_{t\to\infty} \phi_t(m) = m^*\}$$

where ϕ_t is the flow of the accessibility gradient vector field ∇S_s.

Words and concepts are attractors in the semantic manifold; their meanings are their constraint basins. The basin of the word "tree" is the set of all semantic states that, under the pressure of constraint satisfaction, converge to the tree-concept attractor. Words with overlapping basins are synonyms; words with nearby but non-overlapping basins are near-synonyms.

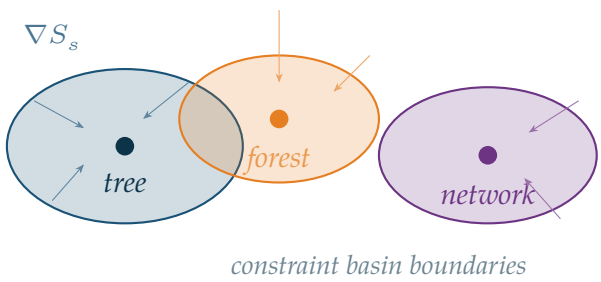

Figure 24.1. Constraint basins in the semantic manifold. Each basin (shaded region) surrounds an attractor (filled circle) corresponding to a concept. The accessibility gradient ∇S_s drives semantic states toward their nearest attractor. Basin boundaries (thick curves) are the separatrices of the gradient flow — the edges of meaning.

24.4 Coherence Structures

Technical Note: Whitney Stratification and Semantic Phase Transitions

The semantic manifold M_s is not a smooth uniform space — it is *stratified*: divided into zones (strata) where qualitatively different cognitive rules apply. Mathematical reasoning, spatial reasoning, emotional reasoning, and social reasoning occupy different strata.

Whitney's condition B governs crossing between strata. When a cognitive trajectory approaches the boundary between two strata, it must approach *tangentially* — gliding along the edge, allowing the semantic structures of one regime to continuously map onto the other. A tangential crossing preserves coherence.

A *transversal* crossing — approaching the boundary head-on — produces a *non-admissible phase transition*: catastrophic loss of semantic structure. In human terms:

suddenly losing your train of thought when switching between two very different modes of reasoning. In AI terms: an incoherent output produced when the system jumps between logical strata without preserving the underlying geometry.
The HYDRA TARTAN tiling architecture addresses this by decomposing the manifold into locally uniform tiles with *annotated noise* at each boundary — an explicit measurement of residual variability that allows the system to recognize when it is near a stratum boundary and slow down accordingly, approaching tangentially rather than transversally.
Practical consequence: the human experience of "shifting gears" between different types of thinking — from formal calculation to creative imagination — has a precise mathematical form. The discomfort or confusion of the gear-shift is the cognitive cost of approaching a stratum boundary non-tangentially. Good thinking involves learning the topography of one's own semantic manifold well enough to always cross boundaries tangentially.

Meaning is not just the identity of individual concepts but the *coherence structure* that holds multiple concepts together.

Definition 24.4: Semantic Coherence Field

The *semantic coherence field* $C_s : M_s^n \to [0, 1]$ measures how well n semantic states mutually support each other — how much each state's activation reduces the constraint violation of the others. High coherence corresponds to a cluster of mutually reinforcing concepts; low coherence corresponds to a collection of unrelated or contradictory ones.

A text has high coherence when its constituent concepts occupy a high-coherence region of M_s^n. Understanding a text is navigating to a region of high coherence. Confusion is occupying a low-coherence region and not finding a path to a higher one.

This explains why metaphor works. A good metaphor maps two domains — whose concepts usually occupy distant regions of M_s — onto a high-coherence configuration that illuminates both. "An argument is a building" is coherent because the structure-stability-foundation cluster of the building domain maps onto a high-coherence configuration with the claim-support-premises cluster of the argument domain.

24.5 Zero Ontology and Semantic Geometry

The zero ontology of Pearce (discussed in the preface to Part VI) proposes that the universe has zero net information content. The semantic geometry framework offers an

interesting perspective on this.

If the universe is an accessibility landscape and meaning is the geometry of constraint basins, then the zero-information universe is one in which all constraint basins have zero depth — no concept has more gravitational pull than any other. This is not a universe of rich meaning but a universe of undifferentiated accessibility: maximum S_s everywhere, minimum ∇S_s.

The formation of meaning — the deepening of constraint basins — is therefore equivalent to the decrease of global accessibility entropy: meaning is purchased at the cost of future possibility. A highly meaningful conceptual structure is a highly constrained one.

The Meaning–Accessibility Tradeoff

In any accessibility landscape, the emergence of stable semantic attractors (concepts, meanings, values) corresponds to a decrease in global accessibility entropy. There is a fundamental tradeoff:

$$\text{Meaning depth} \propto -\Delta S_{\text{global}}.$$

A universe with zero semantic content has maximum accessibility; a universe with rich semantic structure has consumed much of its accessibility in forming constraint basins.

Exercise

Show that two words σ_1, σ_2 are synonyms in the semantic field framework iff $\mathcal{F}(\sigma_1) \cap \mathcal{F}(\sigma_2) \neq \emptyset$ and neither is a proper subset of the other. What does a word being a proper subset of another correspond to semantically?

Exercise

The constraint basin $\mathcal{B}(m^*)$ depends on the accessibility gradient flow, which depends on the accessibility field S_s. Different agents with different constraint structures will have different flows and therefore different basins for the same attractor. Formalize the claim that "the same word means different things to different people" in these terms.

Connecting frameworks

Pearce argues that "nothing is difficult to define" because any specification of nothing already contains structure. Formalize this in the constraint-basin framework: what is the constraint basin of the concept "nothing"? Is it empty, unbounded, or

something else? What does its shape tell us about why nothingness is philosophically problematic?

Part VII

Infrastructure and Civilization

25

Semantic Infrastructure

Roads move matter.
Networks move signals.
Semantic infrastructure moves meaning.
— Flyxion, *Semantic Infrastructure*

Part VII begins. The previous parts developed the individual agent (Part VI) and the physical universe (Part V). Part VII asks: what happens when agents compose into civilizations? What is the infrastructure through which meaning persists, accumulates, and evolves across generations?

App. M for the full category-theoretic treatment

The answer requires going beyond both the individual agent framework of Part VI and the field-theoretic framework of Part V. The appropriate language is category theory: the study of composition.

25.1 Beyond Files and Folders

Contemporary digital infrastructure organizes information as files in folders — a spatial metaphor borrowed from physical paper filing. This metaphor was adequate for documents but is inadequate for knowledge.

The limitations:

- **No semantics:** a file system knows the name and location of a document but nothing about its meaning. Documents about the same topic can be anywhere; documents in the same folder can be about anything.
- **No composition:** files are concatenated, not composed. Merging two research papers produces a combined file, not a synthesized understanding.
- **No versioning with meaning:** version control tracks character-level changes but not conceptual evolution. A theorem that is refactored has changed meaning; a theorem that is merely reformatted has not. File-level diffs cannot distinguish these.

- **No provenance:** a fact's reliability depends on how it was established and by whom. File systems record creation dates but not epistemic genealogy.

Definition 25.1: Semantic Module

A *semantic module* is a triple $(C, A, \partial C)$ where:

- C is the *content* (propositions, procedures, data),
- A is the *admissibility structure* (what inferences from C are valid, what modifications preserve meaning),
- ∂C is the *interface* (what the module exposes to other modules — its public propositions and transformation signatures).

Semantic modules compose through their interfaces. Two modules can be merged if their interfaces are compatible. The result of merging is a new module whose content is the synthesis of both, whose admissibility structure is the intersection of both, and whose interface is the union of both.

25.2 Semantic Modules and Homotopy Merges

The categorical framework of Appendix M formalizes composition as pushouts. But for knowledge, we need a richer notion: *homotopy merges*, which identify not just syntactically identical structures but semantically equivalent ones.

Definition 25.2: Homotopy Merge

Two semantic modules $(C_1, A_1, \partial C_1)$ and $(C_2, A_2, \partial C_2)$ admit a *homotopy merge* if there exists a semantic equivalence $\phi : \partial C_1 \to \partial C_2$ (a homotopy equivalence in the category **Sem**) between their interfaces. The merged module is the pushout:

$$(C_1, A_1, \partial C_1) \sqcup_\phi (C_2, A_2, \partial C_2)$$

with interface $\partial C_1 \cup_\phi \partial C_2$.

Homotopy merges allow modules developed independently to be combined even when their interfaces use different terminology or notation, provided there is a semantic translation between them. This is how interdisciplinary synthesis works: mathematics developed for physics is merged with mathematics developed for biology through a homotopy equivalence (a translation) between the two terminological systems.

Example

The module of thermodynamics (entropy, temperature, heat flow) and the module of information theory (Shannon entropy, mutual information, channel capacity) admit a homotopy merge through the Boltzmann–Shannon correspondence: $S = k_B \log W$ translates between the two interface languages. The merged module contains both physical and informational interpretations of entropy, allowing results from one domain to transfer to the other.

25.3 Knowledge Evolution

Knowledge is not static. It evolves through the following operations on the category **Sem**:

- **Extension:** adding new propositions to a module's content while preserving its interface.
- **Correction:** removing or modifying propositions that have been found false, updating the admissibility structure.
- **Composition:** merging two modules (homotopy merge).
- **Abstraction:** forming a quotient module that exposes only part of the interface while preserving the admissibility structure.
- **Instantiation:** binding abstract modules to specific cases.

These operations define a dynamics on **Sem** — a flow through the space of semantic modules. The RSVP accessibility field of Part V can be interpreted over this space: high-accessibility regions contain modules with many potential extensions and compositions; low-accessibility regions contain modules that are nearly complete or dead ends.

25.4 Semantic Version Control

Traditional version control (Git, SVN) tracks character-level changes to files. Semantic version control tracks conceptual-level changes to modules.

Definition 25.3: Semantic Version History

A *semantic version history* of module M is a sequence

$$M_0 \xrightarrow{e_1} M_1 \xrightarrow{e_2} M_2 \xrightarrow{e_3} \cdots \xrightarrow{e_n} M_n$$

where each e_i is one of the operations (extension, correction, composition, abstraction, instantiation) and each M_i is a valid semantic module. The *semantic diff* between M_i and M_j is the minimal sequence of operations connecting them.

Semantic version control makes knowledge evolution explicit and reversible. When a correction is made (a proposition removed), the version history records why and by whom. When modules are composed, the history records the homotopy equivalence used. The epistemic genealogy of any proposition is recoverable from the version history.

25.5 Obstruction Cohomology

Not all merges succeed. When two modules cannot be merged — when their admissibility structures are incompatible — there is an obstruction. The mathematical theory of obstructions is cohomology (Appendix I).

Definition 25.4: Semantic Obstruction

Two semantic modules $(C_1, A_1, \partial C_1)$ and $(C_2, A_2, \partial C_2)$ have a *semantic obstruction* if their admissibility structures contradict each other: there exist propositions $p_1 \in C_1$ and $p_2 \in C_2$ such that $A_1 \vDash \neg p_2$ and $A_2 \vDash \neg p_1$.

Obstructions correspond to genuine contradictions between knowledge systems — not mere terminological differences (which can be resolved by homotopy equivalence) but deep incompatibilities. The Copernican revolution involved an obstruction between the geocentric and heliocentric modules: the admissibility structure of the geocentric module (celestial spheres, divine ordering) entailed the falsity of the heliocentric module's central propositions.

The Infrastructure Principle

Semantic infrastructure is the engineering discipline that builds, maintains, and extends the category **Sem** — the system of semantic modules, their composition rules, their version histories, and their obstruction structures. Its goal is to maximize the accessibility entropy of the civilizational knowledge base:

$$S_{\mathbf{Sem}} = \log\left|\{\text{admissible extensions of } \mathbf{Sem}\}\right|.$$

A civilization with high $S_{\mathbf{Sem}}$ has a flexible, extensible knowledge base; one with low $S_{\mathbf{Sem}}$ has a rigid, constrained one.

Exercise

Define a metric on **Sem** (the category of semantic modules) that measures how far two modules are from being mergeable. What should such a metric measure? (Consider: number of obstruction pairs, complexity of the homotopy equivalence needed, size of the interface mismatch.)

Exercise

The Internet is often described as an information infrastructure. In what ways does it fail to be a *semantic* infrastructure? Which of the five knowledge evolution operations does it support well, and which does it support poorly?

Constructive

Design a minimal semantic version control system for a single academic paper. What constitutes a "version"? What operations are allowed? How would "correction" and "composition" be represented in your system? What would the semantic diff look like?

26

Xyloarchy and Living Systems

A forest does not grow.
It accumulates. It integrates. It forgets.
It is the oldest semantic infrastructure we know.
— Flyxion, *Semantic Infrastructure*

The previous chapter developed semantic infrastructure as a category of modules and compositions. This chapter grounds that abstraction in the most ancient and successful example of distributed knowledge infrastructure on Earth: forest systems.

Xyloarchy: from Greek xylo (wood) + arche (governance): rule by trees

The claim is not metaphorical. Forests — through mycorrhizal networks, chemical signaling, root competition, and structural interdependence — implement all five knowledge evolution operations defined in Chapter 25: extension, correction, composition, abstraction, and instantiation. The forest is a semantic infrastructure that has been running, with iterative refinement, for approximately 385 million years.

26.1 Forest Intelligence

The concept of plant intelligence remains controversial in biology, partly because it is poorly defined. The accessibility framework offers a precise version: a system exhibits intelligence to the degree that it navigates its environment using accessibility gradients rather than fixed reflexes.

Definition 26.1: Distributed Environmental Intelligence

A distributed system exhibits *environmental intelligence* if it maintains a functional model of its environment (in the sense of Chapter 22) at the collective level, even when no individual component maintains such a model.

Individual trees do not model their environment in any rich sense. But a mycorrhizal network — the "wood wide web" of fungal connections linking trees through soil — collectively integrates information about nutrient availability, stress levels, and competitor

presence across the entire forest. The network's chemical state encodes a distributed model of the forest environment.

> **Historical Note**
>
> Ibn Sina's claim that plants possess a "vegetative soul" (nafs nabatiyya) — the capacity for nutrition, growth, and reproduction — is the earliest formal treatment of plant cognition in the philosophical tradition. The RSVP framework can be understood as a modern version of this claim, generalized: what Ibn Sina called the vegetative soul is the plant's accessibility navigation system, implemented through biochemical gradients rather than neural circuits.

26.2 The Mycorrhizal Network as Semantic Module System

The mycorrhizal network implements the operations of semantic infrastructure (Chapter 25) in biological substrate.

- **Extension:** a tree under carbon stress signals this through the network; neighboring trees respond by allocating additional photosynthate. New information (carbon stress level) is incorporated into the network's distributed model.
- **Correction:** chemical signals that indicate false alarms (stress signals not followed by actual damage) are modulated by the network's response history — a biological analog of epistemic updating.
- **Composition:** when two previously separate mycorrhizal networks join (as trees from different root systems become connected), their distributed models must be reconciled — a biological homotopy merge.
- **Abstraction:** the network's aggregate response to multiple individual stress signals produces a forest-level accessibility map — an abstraction from individual tree states.
- **Instantiation:** specific growth decisions (root elongation, leaf production, reproductive timing) instantiate the abstract forest-level model to individual tree behavior.

26.3 Paper Mills and Epistemic Ecology

The concept of *paper mills* — organizations that mass-produce fake academic papers for purchase — offers a striking illustration of semantic infrastructure failure. In biological terms, paper mills are *epistemic parasites*: they exploit the nutrient channels of academic infrastructure (journals, databases, citation networks) without contributing

to the knowledge base.

Definition 26.2: Epistemic Parasite

An *epistemic parasite* is a semantic module that:

1. Occupies space in the semantic infrastructure (is cited, indexed, stored),
2. Has zero or negative admissibility (its propositions are false or its operations are invalid),
3. Consumes resources (attention, citation credit, storage) from legitimate modules.

Mycorrhizal networks have evolved mechanisms to detect and exclude parasitic fungi — organisms that take nutrients from the network without contributing photosynthate. Academic institutions have analogous mechanisms (peer review, retraction, replication), but these mechanisms are slower and less effective at scale.

The RSVP accessibility framework predicts the consequence of epistemic parasitism: it reduces the accessibility entropy of the knowledge base. Each parasitic paper that is cited occupies a position in the knowledge graph that could otherwise connect legitimate modules. The parasite does not merely waste space — it actively reduces the connectivity of the knowledge graph and therefore the admissible extensions available to future researchers.

26.4 Cities as Organs

A city is an organ of civilizational metabolism. It processes inputs (food, energy, information, people), transforms them through social and economic processes, and exports outputs (goods, services, ideas, institutions).

Definition 26.3: City as Semantic Processor

A city $\mathcal{U}$ is a *semantic processor* if it:

1. Accumulates semantic modules (through libraries, universities, research institutions, cultural memory),
2. Composes them (through the interaction of specialists from different domains),
3. Abstracts from them (through the formation of professional traditions, schools of thought, industrial techniques),
4. Distributes the results (through education, publication, trade, migration).

The RSVP accessibility field of a city is its *knowledge landscape*: the distribution of semantic modules and their accessibility to inhabitants. A dense, well-connected knowledge landscape (high $S_{\mathbf{Sem}}$) allows rapid knowledge evolution; a sparse, isolated one prevents

it.

Jane Jacobs' observation that cities generate innovation through the collision of diverse activities is, in these terms, an observation about accessibility: density and diversity increase the probability of homotopy merges between previously separate modules.

26.5 Constraint Ecology

Living systems — forests, cities, ecosystems — are governed by *constraint ecology*: the dynamics of how constraints propagate, compete, and evolve in complex networks.

Definition 26.4: Constraint Ecology

A *constraint ecology* is a dynamical system over a network of agents $(A_1, \dots, A_n)$ in which:

- Each agent maintains a local constraint set $\mathcal{C}_i(t)$,
- Constraints propagate between connected agents through communication channels E_{ij},
- The global constraint structure $\mathcal{C}(t) = \bigcup_i \mathcal{C}_i(t)$ evolves through local updates and inter-agent propagation.

Constraint ecology unifies the biological, urban, and epistemic systems discussed in this chapter. A healthy ecosystem maintains diverse, locally consistent constraint ecologies that can merge without catastrophic obstruction. An unhealthy ecosystem — monoculture, epistemic bubble, urban homogenization — has reduced constraint diversity and therefore reduced accessibility entropy.

Exercise

Model a simple three-tree mycorrhizal network as a constraint ecology. Define the state space for each tree (carbon level, water stress, pathogen load), the communication channels (mycorrhizal connections), and the constraint update rule. Show that the network reaches a more stable equilibrium than three isolated trees would.

Exercise

Cities in different historical periods have had very different S_{Sem} values. Compare Baghdad at its height (9th century) and Baghdad under the Mongol invasion (13th century) using the accessibility entropy framework. What specific changes reduced S_{Sem}?

Open problem

Define a formal measure of "epistemic parasitism" for academic papers: a score that quantifies the degree to which a paper extracts value from the knowledge infrastructure without contributing to it. What data would be needed to compute this score? Is it possible to construct such a measure that is not itself gameable?

27

Yarncrawler Systems

A city that repairs itself
is not merely convenient.
It is epistemically honest about its own entropy.
— Flyxion, *Semantic Infrastructure*

Chapter 26 developed constraint ecology as the governing dynamics of living knowledge systems. This chapter extends the framework to the engineering question: how do we build systems that *maintain* their constraint ecology over time — that repair entropy, adapt to change, and preserve accessibility without requiring centralized intervention?

Yarncrawler: adaptive repair network; connects to App. O on civilization dynamics

The Yarncrawler framework is the answer. It is a model of adaptive maintenance: distributed systems that move through their environment repairing, connecting, and reorganizing rather than building from scratch.

27.1 Repair Networks

Physical infrastructure degrades. Roads develop potholes; pipes corrode; cables fray. The conventional response is scheduled maintenance: periodic inspection and repair by specialized crews dispatched from central depots. This is a centralized, reactive, low-frequency approach.

Yarncrawler systems propose an alternative: continuous, distributed, proactive maintenance by small autonomous agents that are always embedded in the infrastructure they maintain.

Definition 27.1: Repair Network

A *repair network* is a tuple (I, R, τ_R, κ_I) where:

- I is the infrastructure being maintained (a graph of nodes and edges),
- $R = \{r_1, \dots, r_m\}$ is a collection of repair agents (Yarncrawlers),
- $\tau_R : I \times R \to I$ is the repair function (how agent r at location ℓ modifies I),

- $\kappa_I : I \to \mathbb{R}_{\geq 0}$ is the infrastructure constraint violation functional (how degraded the infrastructure is at each point).

The goal of the repair network is to minimize $\int_I \kappa_I \, d\mu$ (total constraint violation) while each agent operates only with local information — it can only observe the state of its immediate neighborhood.

27.2 Moving Infrastructure

A key insight of the Yarncrawler framework is that infrastructure need not be static. The conventional picture separates the infrastructure (static: roads, buildings, pipes) from the agents that use it (dynamic: vehicles, people, water). The Yarncrawler picture blurs this distinction: the repair agents *are* a component of the infrastructure, and they move.

Definition 27.2: Moving Infrastructure

A *moving infrastructure element* is an agent $r \in R$ that:

1. Provides infrastructure services (connectivity, resource transport, information relay) as it moves,
2. Collects infrastructure state information (degradation level, resource levels, congestion) as it passes through,
3. Modifies the infrastructure (repairs, reroutes, reinforces) in response to observed state.

A Yarncrawler is a moving infrastructure element. As it traverses the city, road, or network, it simultaneously serves the functions of sensor, actor, and carrier. The repair is not a separate activity from the service — it is woven into the service.

27.3 Adaptive Maintenance

Standard maintenance is scheduled: it occurs at fixed intervals regardless of actual degradation state. Adaptive maintenance responds to the actual state of the infrastructure.

Definition 27.3: Adaptive Maintenance Strategy

A *adaptive maintenance strategy* for Yarncrawler r is a policy $\pi_r : \mathcal{O}_r \to \mathcal{A}_r$ mapping local observations to actions, where:

- $\mathcal{O}_r$ includes the current degradation level $\kappa_I(\ell_r)$ and neighboring degradation

levels,

- $\mathcal{A}_r$ includes movement actions (which direction to move), repair actions (how much resource to expend on current location), and relay actions (what information to broadcast).

The strategy is *accessibility-optimal* if π_r maximizes the expected accessibility entropy of the infrastructure:

$$\pi_r^* = \arg\max_{\pi_r} \mathbb{E}[S_I(t+H) \mid \mathcal{O}_r(t), \pi_r]$$

over a horizon H.

Accessibility-optimal maintenance prioritizes repairs that maximize future infrastructure flexibility — not simply the most degraded locations, but the locations where repair would most increase the admissible uses of the infrastructure.

27.4 Stigmergic Planning

Yarncrawlers coordinate not through central planning but through *stigmergy*: indirect coordination through shared environment modification.

Definition 27.4: Stigmergic Coordination

Yarncrawlers use *stigmergic coordination* when:

1. Each agent modifies the environment as it acts (by repairing, by leaving chemical/digital markers, by updating shared maps),
2. Other agents' behavior is modified by these environmental changes without direct communication,
3. The collective behavior that emerges is globally coherent despite only local information being available to any agent.

Stigmergy is the coordination mechanism of ant colonies, termite mounds, slime molds, and Wikipedia. Each agent acts on local information; the environment records the aggregate effect; subsequent agents respond to the recorded aggregate. The environment serves as the coordination medium.

In the Yarncrawler framework, the infrastructure itself is the stigmergic medium. Each repair leaves a trace (a physical trace — the repaired surface — and potentially a digital trace in a maintenance log). Other Yarncrawlers observe these traces and preferentially visit recently repaired versus never-visited versus frequently-visited locations, creating an emergent maintenance pattern that reflects the actual degradation dynamics of the infrastructure.

27.5 Connection to Semantic Infrastructure

The Yarncrawler framework extends naturally from physical infrastructure to semantic infrastructure (Chapter 25).

In semantic infrastructure, the "degradation" of a knowledge module corresponds to:

- Propositions becoming outdated (empirical facts changing),
- Connections breaking (referenced modules being corrected or retracted),
- Terminology drifting (the meaning of terms shifting),
- Accessibility decreasing (the module's potential extensions shrinking as surrounding modules evolve without it).

Semantic Yarncrawlers are agents that continuously traverse the knowledge graph, identifying degraded connections, updating outdated propositions, resolving terminological drift, and maintaining the admissibility structures of modules. Large language models — if equipped with accurate models of their own uncertainty and well-designed update mechanisms — could serve as semantic Yarncrawlers.

The Yarncrawler Principle

Any complex system that must maintain coherence over time in a changing environment requires distributed repair agents that: (1) are always embedded in the system, (2) act on local information, (3) coordinate stigmergically through environmental modification, (4) optimize for accessibility entropy rather than immediate performance. Systems without Yarncrawlers accumulate constraint violations until catastrophic repair or collapse becomes necessary.

Exercise

Model a simple road repair network with 3 Yarncrawlers on a 10-node graph. Define κ_I as the age of each road segment since last repair. Define a simple adaptive strategy π_r and simulate the dynamics. Compare total constraint violation over time to a scheduled maintenance strategy that repairs each node at fixed intervals.

Exercise

Wikipedia can be modeled as a stigmergic semantic maintenance system. Identify the Yarncrawler agents (human editors, bots), the environmental modifications they make (edits, reversions, talk page comments), and the stigmergic signals they leave (edit history, watchlists, talk page flags). Where does this model succeed and where does it break down?

Design

Design a Yarncrawler system for a university library. What constitutes "degradation" for a library's semantic infrastructure? What actions can a Yarncrawler take? What stigmergic signals are available? How does the system balance maintenance of existing collections against acquisition of new materials?

Part VIII

Mathematical Foundations: Logic and Boolean Geometry

28

Logic as Geometry: The Boolean Landscape

Logic is not the science of valid inference.
That is merely its application.
Logic is the geometry of truth.
— Flyxion, *Semantic Infrastructure*

Part VIII occupies an unusual position in the monograph. The material here — Boolean lattices, hypercube decompositions, the geometry of logical operators — was historically developed *before* the frameworks of Parts I–VII. But it is placed here because it can now be understood in its proper context: as a special case of the accessibility geometry developed in Part IV, specialized to the discrete two-valued domain.

App. D and App. E give the complete formal treatment; connects to Boolean lattice diagram (Fig. 28.1)

Logical operators are not isolated symbols. They are points in a geometric space. Understanding them geometrically reveals structure that the symbolic presentation obscures.

28.1 The Curriculum Question

Before developing the geometry, we should address a pedagogical question that this chapter raises directly. The standard mathematics curriculum is *algebra-first*: children encounter numbers, operations, equations, and functions before they encounter logic, set theory, or geometry as separate disciplines. Logic, if it appears at all, arrives late — as a chapter in a discrete mathematics course, or as the preamble to a proof-writing course.

What would a *logic-first* curriculum look like? And what kind of mathematical thinking would it produce?

Conceptual Aside: Seven Mathematical Schools

Consider seven possible entry points into mathematics, each corresponding to a different primary mathematical object:

- **Geometry school:** space, shape, symmetry, transformation.
- **Algebra school:** symbol, equation, structure, abstraction.
- **Trigonometry school:** cycle, wave, angle, periodicity.
- **Calculus school:** change, rate, accumulation, limit.
- **Statistics school:** uncertainty, evidence, inference, variation.
- **Stoichiometry school:** conservation, transformation, balance, reaction.
- **Logic school:** truth, implication, consistency, proof.

Each school produces a different cognitive orientation. The logic-first student learns to ask: *what follows necessarily from what?* The geometry-first student asks: *what is the shape of this?* The statistics-first student asks: *what is the evidence for this?* These orientations are complementary — the richest mathematical minds move fluidly between them — but they are genuinely different.

28.2 The Space of Binary Connectives

The starting point of Boolean geometry is the observation that there are exactly 16 binary connectives — 16 Boolean functions of two variables. These 16 functions form a geometric object: the four-dimensional hypercube Q_4.

Definition 28.1: Binary Connective Space

The *binary connective space* is $B_2 = \{0,1\}^4$, with each vertex corresponding to one binary connective, labeled by its output column over the four input states TT, TF, FT, FF.

The familiar operators sit at specific vertices:

$$\begin{aligned} \top &= 1111 & \bot &= 0000 \\ \text{AND} &= 0001 & \text{OR} &= 0111 \\ \text{NAND} &= 1110 & \text{NOR} &= 1000 \\ \text{XOR} &= 0110 & \text{XNOR} &= 1001 \end{aligned}$$

The Hamming distance between vertices is their *logical distance*: how many truth-value assignments they disagree on.

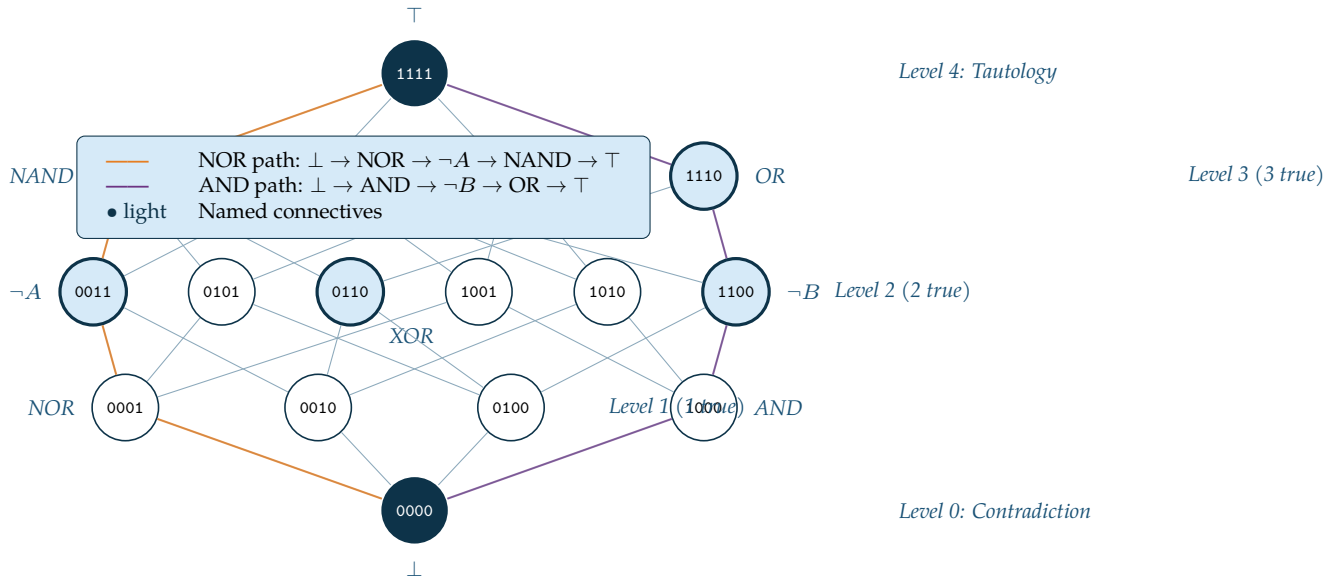

Figure 28.1. The Hasse diagram of B_2: all 16 binary Boolean connectives ordered by truth-set inclusion. Bottom: contradiction ($\bot = 0000$). Top: tautology ($\top = 1111$). Highlighted amber path traces $\bot \to$ NOR $\to \neg A \to$ NAND $\to \top$. Highlighted purple path traces $\bot \to$ AND $\to \neg B \to$ OR $\to \top$.

28.3 Logic as Accessibility Geometry

The Boolean lattice B_2 has a natural accessibility interpretation. Each connective $f \in B_2$ has an accessibility entropy:

$$S(f) = \log |R_f| = \log |\{x \in \{TT, TF, FT, FF\} : f(x) = 1\}|$$

where R_f is the truth region of f.

- $S(\bot) = \log 0 = -\infty$ (contradiction: no true inputs)
- $S(\text{AND}) = \log 1 = 0$ (most restrictive non-contradiction)
- $S(\text{XOR}) = \log 2$ (two true inputs)
- $S(\text{OR}) = \log 3$ (three true inputs)
- $S(\top) = \log 4$ (tautology: maximum accessibility)

The Hasse diagram is the accessibility landscape of the binary connective space. Moving upward in the diagram corresponds to increasing accessibility entropy. The accessibility gradient flow — the flow toward higher S — runs from contradiction to tautology along the edges of the lattice.

Proposition 28.1: Implication as Accessibility Ordering

$p \to q$ (logical implication) holds if and only if $S(p \wedge \cdot) \leq S(q \wedge \cdot)$ for all connectives: p's truth region is a subset of q's. Implication is accessibility containment.

28.4 The Penteract and Hypercube Splitting

The binary connective space $B_2 = Q_4$ can be extended to three variables: $B_3 = Q_8$ with $2^8 = 256$ connectives. Visualizing Q_8 directly is impossible, but it decomposes into two copies of Q_4:

$$Q_5 = Q_4 \times \{0, 1\}$$

This is the *penteract*: five-dimensional hypercube, visualized as two tesseracts (Q_4) connected by matching edges. Each splitting corresponds to fixing one binary variable and examining the resulting four-variable space.

There are five coordinate splittings of Q_5 (one per dimension), each revealing a different organizational principle of the space. No single visualization captures all five simultaneously — any projection into 2D discards information. This is the Boolean version of the information loss theorem (Appendix B): the geometry of logic cannot be fully represented in any flat diagram.

28.5 Seven Curricula, One Landscape

Returning to the seven mathematical schools: each school produces a different entry point into the Boolean landscape.

- The **geometry-first** student sees the Hasse diagram as a polytope — a projection of a hypercube — and immediately asks what happens in higher dimensions.
- The **algebra-first** student sees a lattice with two operations ($\wedge$, $\vee$) and a complement, and asks about the algebraic axioms.
- The **logic-first** student sees a space of connectives ordered by implication and asks which paths correspond to valid inference chains.
- The **statistics-first** student sees each connective as a binary classifier and asks which achieves highest accuracy on which data distributions.
- The **calculus-first** student sees the lattice as a discrete gradient system and asks what the continuous limit looks like.

None of these perspectives is wrong. All of them reveal genuine structure in the object. The logical geometry of B_2 is rich enough to contain all five entry points simultaneously.

This is the key pedagogical claim: starting from any of the seven schools, a sufficiently curious student will eventually discover the others. The accessibility landscape of mathematics is connected — every concept can be reached from every starting point — but the paths differ, and different paths develop different cognitive orientations.

The Curriculum Equivalence Theorem

All seven mathematical schools are connected in the accessibility graph of mathematical concepts: from any starting concept, any other concept can be reached by a finite chain of natural conceptual extensions. The seven schools differ not in their ultimate destinations but in the order of traversal and the depth of each concept encountered along the way.

Exercise

Compute the Hamming distance between all pairs of named connectives ($\top, \bot$, AND, OR, NAND, NOR, XOR, XNOR, $\neg A, \neg B$). Which pair is most logically similar (minimum distance)? Which is most dissimilar (maximum distance)?

Exercise

The Boolean lattice B_2 has 16 elements. How many elements does B_3 (three-variable connectives) have? How many edges does the Hasse diagram of B_3 have? At what rate does the complexity of the Boolean landscape grow with the number of variables?

Pedagogical

Design a three-week logic-first mathematics curriculum for 10-year-olds. What would be taught in week 1 (the Boolean lattice), week 2 (circuits and computation), and week 3 (connections to arithmetic)? What algebraic concepts would students encounter naturally, without being explicitly taught algebra?

Part IX

Symbols, Alphabets, and Compression

29

From Gesture to Glyph

Writing did not begin when someone decided to record language.
It began when someone noticed that their hand left marks that others could follow.
— Flyxion, *Semantic Infrastructure*

Part IX develops the theory of symbols, alphabets, and compression. This chapter examines the deepest transition in the history of human communication: the emergence of glyphs from gestures.

Connects to App. F gesture manifolds; Ch. 10–13 on gesture theory

The claim of the Gesture Before Symbol framework (Chapters 10–13) is that symbols are projections of gesture equivalence classes. Applied to writing, this becomes: glyphs are fossil gestures — motor trajectories whose temporal structure has been compressed into a static spatial mark.

29.1 How Movement Becomes Mark

The transition from gesture to mark is a projection in the strict sense of Appendix B. The gesture $\gamma : [0, T] \to \mathbb{R}^3$ is a trajectory through the hand's configuration space. The mark $m \in \mathbb{R}^2$ is its trace on a surface — a projection from the three-dimensional, temporal gesture to the two-dimensional, atemporal imprint.

Definition 29.1: Trace Projection

The *trace projection* of a writing gesture is the map $\Pi_{\text{trace}} : \mathcal{G} \to \mathcal{M}$, where $\mathcal{M}$ is the space of planar curves, defined by $\Pi_{\text{trace}}(\gamma) = \{(\gamma_x(t), \gamma_y(t)) : t \in [0, T]\}$. The trace discards timing, pressure variation, and the full three-dimensional trajectory, retaining only the planar ink path.

The fiber $\Pi_{\text{trace}}^{-1}(m)$ over a single mark m is enormous: it contains all gestures that produce the same planar trace regardless of speed, pressure, pen tilt, or three-dimensional hand

movement. What writing preserves is the *shape* of the gesture; what it discards is the *dynamics*.

29.2 The Stabilization of Traces

A single person making a single mark produces one trace. A culture making a particular mark repeatedly, across many individuals and occasions, produces a distribution over traces. The *stable trace* — the canonical form that the culture recognizes — is an attractor in the space of traces: the mode of this distribution.

Definition 29.2: Stable Glyph

A *stable glyph* is an attractor $g^* \in \mathcal{M}$ in the trace space under the dynamics of cultural transmission. It satisfies: (1) traces produced by competent writers converge to g^*, and (2) the basin $\mathcal{B}(g^*)$ is large enough to include the natural variation of all competent writers.

A glyph is stable when its basin of attraction in trace space is large relative to the variation produced by the community. Letters whose basins are small — easily confused with neighboring attractors — are unstable and tend to be replaced or merged with neighboring letters in the course of script evolution.

29.3 Why Writing Systems Emerge

Writing systems do not emerge when humans develop the capacity to make marks — that capacity is ancient, predating *Homo sapiens*. They emerge when two additional conditions are met:

1. **Stable attractors:** the culture has developed a set of stable glyphs whose basins are reliably accessible to all community members.
2. **Compositional semantics:** sequences of glyphs are assigned meanings that are not arbitrary — the meaning of a sequence is computable from the meanings of its parts by a systematic rule (syllabic, alphabetic, logographic).

The first condition is a constraint on the accessibility landscape of trace space: enough stable attractors must exist, spread far enough apart, to distinguish the basic units of the language. The second condition is a constraint on the semantic infrastructure: the system of glyphs must implement a module with a composable interface.

29.4 Gesture Fossilization

Over centuries, glyphs drift from their gestural origins. The Phoenician letter *aleph* began as a pictograph of an ox head; the Greek Α and Latin A retain the shape but have lost all connection to the ox. The gesture that originally drew the ox head is now a standardized abstract form produced by culturally trained motor programs entirely unlike the original sketching motion.

Definition 29.3: Gesture Fossilization

A glyph undergoes *gesture fossilization* when:

1. The motor program for producing it is standardized to a fixed sequence of strokes regardless of any representational intent,
2. The fiber $\Pi_{\text{trace}}^{-1}(g)$ has shrunk: fewer gesture trajectories are recognized as producing g,
3. The connection to the original representational gesture is no longer accessible to competent writers.

Fossilization is irreversible under normal conditions: a fossilized glyph cannot be "un-fossilized" by historical knowledge alone. The motor program for writing A has been overwritten by thousands of repetitions; the original ox-head gesture cannot be recovered by knowing that A derives from aleph.

Exercise

The Chinese character for "sun" (日) began as a pictograph of a circle with a dot (the sun's disk). Trace its evolution through oracle bone, bronze, seal, and modern forms. At what point does fossilization occur? What is the trace projection of the modern form versus the original?

Exercise

Arabic script is cursive — letters connect and change shape depending on their position in a word (initial, medial, final, isolated). Model this as a context-dependent trace projection: the same glyph has different attractors depending on its position in the word. What does this imply about the fiber structure of Arabic character recognition?

Open problem

Can writing systems be designed that maximize the stability of their glyphs while minimizing motor acquisition cost? Define both quantities formally and propose an optimization criterion. What does the optimal alphabet look like?

30

The Geometry of Alphabets

An alphabet is not a list.
It is a tiling of perceptual space
whose pieces must be large enough to distinguish
and small enough to learn.
— Flyxion, *Semantic Infrastructure*

A writing system imposes a geometric structure on the space of possible marks. The letters of an alphabet are not arbitrary — they are the result of an optimization process operating over centuries, selecting for marks that are perceptually distinct, motorically accessible, and spatially efficient.

Connects to constraint basins (Ch. 24) and the Boolean lattice (App. D)

This chapter analyzes that structure using the accessibility and constraint frameworks developed in earlier parts.

30.1 Letters as Compressed Shapes

Every letter is a compression: it discards the continuous variation of handwriting and retains only the features necessary for identification. But what features are retained?

Definition 30.1: Distinguishing Features of a Glyph

The *distinguishing feature set* of a glyph g is the minimal set $F(g)$ of geometric properties such that g is the unique glyph in the alphabet with all properties in $F(g)$:

$$F(g) = \arg\min_{F' \subseteq \mathcal{F}} |F'| \text{ s.t. } \forall g' \neq g : \; F(g') \not\supseteq F'$$

where $\mathcal{F}$ is the full space of geometric features.

Different writing systems use different feature sets. The Latin alphabet relies heavily on: vertical strokes (I, l), horizontal strokes (E, F, H), diagonal strokes (A, V, W, X), curves (C, G, S, O), and enclosed regions (B, D, O, P, R). Arabic relies on: dot count,

dot position, baseline connectivity, and curve direction. Chinese relies on: stroke count, stroke type, and spatial arrangement.

30.2 Symmetry, Rotation, Reflection

Many alphabets exploit or avoid visual symmetry systematically.

Proposition 30.1: Symmetry Creates Confusion

Glyphs that are related by rotation or reflection are easily confused. If g and $\rho(g)$ (where ρ is a rotation or reflection) are both in the alphabet, their constraint basins $\mathcal{B}(g)$ and $\mathcal{B}(\rho(g))$ are adjacent in trace space, increasing confusion probability.

This explains a persistent difficulty in reading acquisition: children confuse b and d (reflection), p and q (reflection), b and p (rotation), n and u (rotation). These pairs are related by simple geometric transformations. A better-designed alphabet would maximize the distance between all pairs of letters under all natural transformations.

The Arabic alphabet largely avoids this problem. Letters that share a base shape are distinguished by diacritics (dot count and position) rather than reflection or rotation, making the distinguishing feature more salient and less prone to transformation confusion.

30.3 Stroke Economy

Every additional stroke in a glyph increases the motor acquisition cost and the writing speed cost. The most economical alphabet uses the minimum number of strokes to maintain perceptual distinctiveness.

Definition 30.2: Stroke Economy

The *stroke economy* of an alphabet $\mathcal{A}$ is:

$$E(\mathcal{A}) = \frac{|\mathcal{A}|}{\sum_{g \in \mathcal{A}} \text{strokes}(g)}$$

— the number of letters per average stroke count. Higher economy means more letters per stroke.

The Latin alphabet has moderate stroke economy: most letters require 2–4 strokes. Korean hangul has high stroke economy through its systematic block structure: basic strokes are combined in consistent patterns. Chinese characters have low stroke economy

on average (many strokes per character) but high semantic economy (each character carries more meaning).

30.4 The Accessibility Landscape of Alphabets

An alphabet defines an accessibility landscape over the space of possible marks. Each letter is an attractor; its basin is the region of marks that readers will classify as that letter.

A well-designed alphabet maximizes the minimum basin size (all letters are equally distinguishable) while minimizing the total feature complexity (letters are as simple as possible). This is a classical information-theoretic optimization, but with a geometric formulation.

The Alphabet Optimization Principle

An optimal alphabet $\mathcal{A}^*$ for a community with perceptual variability σ and motor precision μ maximizes:

$$\mathcal{A}^* = \arg\max_{\mathcal{A}} \min_{g \neq g' \in \mathcal{A}} d_{\text{perc}}(g, g') - \lambda \sum_{g \in \mathcal{A}} \text{complexity}(g)$$

where d_{perc} is perceptual distance and λ trades distinctiveness against simplicity. Observed alphabets approximate this optimum, with the approximation improving over centuries of use.

Exercise

For the ten most common English letters (E, T, A, O, I, N, S, H, R, D), compute the pairwise Hamming distances in a simple feature space (presence/absence of: vertical stroke, horizontal stroke, diagonal, curve, enclosure, dot). Which pairs have minimum distance? Do these predict the most common reading confusions?

Exercise

Design a minimal 26-letter alphabet that maximizes stroke economy while maintaining perceptual distinctiveness. How many strokes per letter does your alphabet average? Compare to the Latin alphabet.

Cross-linguistic

Compare the distinguishing feature sets of Arabic, Hebrew, Greek, and Latin scripts. Each developed from related Semitic origins. What geometric features did each preserve and which did each innovate? Can you identify a common ancestor feature set?

31

Orthographic Evolution

Scripts do not drift randomly.
They drift toward efficiency, legibility, and the limits of the human hand at the speed it is asked to move.
— Flyxion, *Semantic Infrastructure*

Writing systems evolve. Over centuries and millennia, scripts transform in ways that are not random but are governed by systematic pressures: toward faster production, toward greater consistency, toward reduced ambiguity. This chapter examines orthographic evolution as a constraint descent process: scripts move toward configurations of lower constraint violation under the pressures of use.

Connects to gesture fossilization (Ch. 28) and constraint descent (App. A)

31.1 Arabic: Cursive Optimization

Arabic script represents one of the most sophisticated solutions to the speed-distinctiveness tradeoff in the history of writing. Its cursive form — in which letters connect and change shape with position — is often presented as complex. The constraint-descent view reveals it as elegant.

The four positional variants of each letter (isolated, initial, medial, final) are not arbitrary complications. They are the result of optimizing two competing constraints:

1. **Connectivity:** cursive writing is faster than print because the pen does not leave the surface between letters.
2. **Distinctiveness:** letters must remain distinguishable despite deformation from the baseline form.

The positional variants represent the four stable attractors in letter-shape space that satisfy both constraints simultaneously: connected to the preceding letter, connected to the following letter, connected to both, connected to neither.

31.2 Latin: From Majuscule to Minuscule

The Latin alphabet underwent a major transformation between the 4th and 9th centuries CE: from all-capitals (majuscule) to mixed case (minuscule). This transition was driven by a single constraint: writing speed.

Minuscule letters are faster to produce than majuscule for three reasons:

- **Fewer strokes:** many minuscules require fewer pen lifts than their majuscule equivalents.
- **Shorter travel:** ascenders and descenders guide the pen in a consistent vertical rhythm, reducing lateral travel.
- **Ligatures:** minuscule letters connect naturally into common clusters (st, ct, æ, œ), enabling cursive-like efficiency.

The majuscule-to-minuscule transition is a constraint descent: the constraint violation functional κ_{speed} (time per word) decreased substantially with the new script.

31.3 Greek, Coptic, and Constructed Scripts

The Greek alphabet demonstrates the opposite of fossilization: active construction. When the Greeks adapted the Phoenician alphabet to write vowels (around 800 BCE), they were not merely adopting a system — they were engineering one. The letters they repurposed (aleph → alpha, he → epsilon, yod → iota) were chosen not for sound but for phonemic coverage: which Phoenician letters sounded most like Greek vowels?

This is a constraint satisfaction problem: assign Phoenician letters to Greek phonemes such that the assignment minimizes perceptual distance between letter-name and phone, while maximizing coverage of the Greek phonemic inventory.

The Coptic alphabet (derived from Greek to write Egyptian) similarly involved active engineering: Greek letters were supplemented with Demotic Egyptian characters for phonemes Greek did not possess. The Coptic designers solved a gap-filling constraint problem: extend the Greek basis to cover the full Coptic phonemic space with minimum additional symbols.

31.4 Constructed Scripts as Constraint Satisfaction

Deliberately constructed scripts — the Korean hangul (1443 CE), the Cherokee syllabary (1820s), the Canadian Aboriginal syllabics (1840s), and many others — provide natural experiments in orthographic design. Each was designed by one or a small number of inventors, making the design choices explicit.

Definition 31.1: Constructed Script Optimality

A *constructed script* is *optimal* for a language L if it minimizes total constraint violation:

$$\kappa_{\text{total}} = w_1\kappa_{\text{completeness}} + w_2\kappa_{\text{distinctiveness}} + w_3\kappa_{\text{economy}} + w_4\kappa_{\text{learnability}}$$

where w_1, w_2, w_3, w_4 are weights reflecting the community's priorities.

Hangul is remarkable for its systematic design: consonants are based on the shape of the mouth and tongue during articulation (a form of phonetic iconicity), and syllable blocks are composed from consonants and vowels according to a regular spatial grammar. This achieves high learnability (the blocks encode phonetic structure) and high distinctiveness (the spatial arrangement provides additional cues).

31.5 Why Alphabets Drift Over Centuries

Even well-designed scripts drift. The drift follows predictable patterns:

1. **Speed simplification:** strokes that can be omitted without loss of distinctiveness are omitted. Features that require pen lift are merged into continuous curves.
2. **Frequency adjustment:** common letters become simpler; rare letters remain complex because the frequency-weighted optimization favors common-letter efficiency.
3. **Distinctiveness pressure:** when confusion between letters increases (due to simplification of one), the other is elaborated or the simplified form acquires a diacritic.

This is precisely constraint descent: the script evolves by locally reducing κ_{total}, with each generation of writers making small modifications that persist if they reduce the functional.

Exercise

Track the evolution of the letter R from Phoenician *resh* through Greek ρ (rho) to Latin R. At each stage, identify the constraint pressure that drove the change. Express each transformation as a modification of the distinguishing feature set $F(g)$.

Exercise

Korean hangul and the Cherokee syllabary were both designed to maximize learnability for a specific community. Compare their design strategies. What different

constraints were the designers optimizing for? Which is more learnable for a native speaker of each language, and why?

Design

Design an optimal writing system for a language with exactly 20 consonants and 5 vowels, using the constraint satisfaction framework. Your alphabet should minimize κ_{total} with weights $w_1 = w_2 = w_3 = w_4 = 1/4$. What does your alphabet look like?

32

Semantic Compression Through Writing

Writing is not a record of thought.
It is thought at a different resolution —
thought compressed to survive the journey
across time and across minds.
— Flyxion, *Semantic Infrastructure*

The previous three chapters examined writing from the motor, perceptual, and evolutionary angles. This chapter examines it from the information- theoretic angle: writing as a compression technology.

Connects to semantic renormalization (Ch. 8) and the renormalization tower

32.1 Writing as a Storage Technology

The fundamental function of writing is to extend the constraint-preserving memory chain of Chapter 23 across two barriers that biological memory cannot cross: *death* and *distance*.

Biological memory dies with the individual. Writing persists. The author of a cuneiform tablet from 2500 BCE is dead; the tablet is not. The constraint modifications that the author's experiences induced — the knowledge, the procedures, the stories — are preserved in the tablet's marks and can induce (approximately similar) constraint modifications in any reader who can decode the script.

Definition 32.1: Writing as Extended Memory

Writing is a *distributed constraint-preserving memory system*: a technology for encoding constraint modifications $\Delta\mathcal{C}$ as physical marks $m \in \mathcal{M}$, and decoding those marks to reconstruct (approximately) the original constraint modifications in a reader's cognitive system.

The reconstruction is approximate because the decoding is itself a projection: the reader's cognitive state, prior knowledge, and interpretive framework all influence what con-

straint modification is induced by a given text. The same text induces different constraint modifications in different readers — this is the fundamental hermeneutic problem.

32.2 The Economics of Symbols

Every symbol in a writing system has a cost and a value. The cost is the motor effort to produce it and the visual effort to recognize it. The value is the semantic work it performs: how much meaning it carries, how much ambiguity it resolves.

Definition 32.2: Symbol Economy

The *economy* of a symbol σ in context C is:

$$e(\sigma, C) = \frac{I(\sigma; M \mid C)}{\text{cost}(\sigma)}$$

where $I(\sigma; M \mid C)$ is the mutual information between the symbol and the intended meaning M given context C, and $\text{cost}(\sigma)$ is the production cost (strokes, time).

Efficient writing systems evolve toward high symbol economy. Function words ("the," "a," "is") are short because they are frequent and carry little information per occurrence — their meaning comes from position and context. Content words ("photosynthesis," "carburetor") can be long because they are infrequent but carry high information per occurrence.

32.3 Compression versus Expressiveness

Worked Example: DocPerturb and Semantic Colored Noise

The compression-expressiveness tradeoff of writing has a precise computational instantiation in the *DocPerturb* framework for generating controlled document variations.

The orthodox failure: Standard text-rewriting tools use thesaurus substitution — "white noise" that swaps words uniformly across the document regardless of semantic importance. Result: "The scientist examined the structure" becomes "The investigator cautiously promulgated the constitution of the antique edifice." Technically synonymous; semantically absurd. The document's geometric position on the semantic manifold has been violated.

The RSVP reinterpretation: A document is not a text file but a *coordinate* on a semantic manifold M_s. The sentences "The scientist examined the structure" and

"The researcher analyzed the architecture" occupy the same region of M_s — they are different coordinate representations of the same underlying semantic point.

Domain rigidity (measured by a curvature tensor ω_p) governs how much variation is admissible:

- *High rigidity* (legal contracts, technical specifications): the semantic space has high curvature. Swapping "shall" for "may" crosses a *deontic boundary* — a non-holonomic failure that breaks legal liability. The admissible trajectory space is extremely narrow.
- *Low rigidity* (literary fiction, exploratory essays): the space is nearly flat. Wide tonal register variations, synonym substitution, and structural rearrangement all remain within the admissible region.

Semantic colored noise: DocPerturb allocates variation budget to components with high *remaining semantic freedom* (unexplored dimensions of meaning) and away from components that are already fully determined (the thesis, the causal chain, the polarity). This "completion-weighted allocation" maximizes semantic diversity without crossing into inadmissible territory — the CLIO principle applied to text generation.

The mathematical connection to RSVP accessibility: maximizing the volume of accessible semantic space in DocPerturb is structurally identical to the universe maximizing accessible physical trajectories as it relaxes from the Friedmann saddle. Different projections of the same geometry.

There is a fundamental tradeoff in writing system design: compression (fewer symbols, less writing effort) versus expressiveness (finer semantic distinctions, less ambiguity).

Proposition 32.1: Compression-Expressiveness Tradeoff

For any writing system $\mathcal{W}$ mapping meanings M to marks $\mathcal{M}$: if $|\mathcal{W}|$ is the vocabulary size, then

$$\text{average compression} \times \text{average expressiveness} \leq H(M)$$

where $H(M)$ is the entropy of the meaning distribution. Maximizing one necessarily reduces the other.

This tradeoff appears throughout writing history:

- Chinese logographic writing: high expressiveness (each character carries a complete morpheme), lower compression (many characters to learn).
- English alphabetic writing: high compression (26 letters encode all words), lower

expressiveness (spelling ambiguities, homophones, contextual disambiguation required).

- Mathematical notation: extreme expressiveness (every symbol precisely defined), low compression (requires extensive notation apparatus for each domain).

32.4 The Renormalization of Writing

The semantic renormalization framework of Chapter 8 applies directly to writing systems. Each level of the renormalization tower corresponds to a different level of linguistic representation:

- **Level 0** (full gesture): the complete motor trajectory of writing — timing, pressure, three-dimensional movement.
- **Level 1** (allograph): the recognizable handwriting variant — this writer's particular letter form.
- **Level 2** (grapheme): the abstract letter type — "A" regardless of font, handwriting, or script style.
- **Level 3** (morpheme): the smallest meaningful unit — the word or word-part.
- **Level 4** (proposition): the complete assertion.
- **Level 5** (discourse): the extended text and its coherence structure.

Each level renormalizes the previous: the allograph is the equivalence class of gestures, the grapheme is the equivalence class of allographs, the morpheme is the equivalence class of grapheme sequences with the same meaning. At each level, variation within the class is integrated out; only the features relevant to the next level are preserved.

The Writing Renormalization Theorem

Every writing system defines a renormalization tower over the gesture space $\mathcal{G}$:

$$\mathcal{G} \twoheadrightarrow \text{Allographs} \twoheadrightarrow \text{Graphemes} \twoheadrightarrow \text{Morphemes} \twoheadrightarrow \text{Propositions} \twoheadrightarrow \text{Discourse}$$

Each level is a quotient of the previous by an equivalence relation that preserves communicative function while discarding motor variation. The tower is lossy: information destroyed at any level is not recoverable at higher levels.

Exercise

Estimate the entropy at each level of the writing renormalization tower for a 1000-word English essay. At each level, estimate: how many distinguishable elements exist? What is the probability distribution over those elements? What is the resulting entropy?

Exercise

Emoji constitute a partial writing system: a vocabulary of semantic units that can be composed into messages. Analyze emoji as a semantic compression system. What is the expressiveness of emoji versus alphabetic text? What meanings are compressible into emoji and which are not?

Historical

Mathematical notation has evolved dramatically over the past 500 years (from verbose rhetorical algebra to modern symbolic algebra). Apply the symbol economy framework to this evolution. Identify three specific notational innovations and show how each increased symbol economy.

Part X

Navigation Through Knowledge

33

Beyond Files and Folders

The filing cabinet was a solution to a 19th-century problem. We are still using it for a 21st-century one.
— Flyxion, *Semantic Infrastructure*

Chapter 25 argued that knowledge needs a categorical infrastructure — modules, morphisms, composition — rather than files and folders. This chapter examines the limitations of hierarchical storage in detail and develops alternative organizational principles.

Extends Ch. 25 semantic infrastructure; connects to App. M

33.1 The Limitations of Hierarchical Storage

Files in folders implement a tree structure: every item has exactly one parent folder. Trees are a reasonable model for some data (taxonomies, organizational charts) but a poor model for knowledge, which is a graph.

The fundamental problem: *a concept belongs to multiple categories simultaneously*. A paper on the ecology of mycorrhizal networks belongs in biology, ecology, soil science, evolutionary biology, and perhaps computational network theory. A file system forces a choice; a knowledge graph does not.

Definition 33.1: Knowledge as Topology

A *knowledge topology* is a topological space (K, τ_K) where K is the set of knowledge items and τ_K is a topology generated by semantic similarity: open sets are semantically coherent clusters. A hierarchical file system implements a topology generated by a single tree; knowledge naturally requires a richer topology.

33.2 Knowledge as Terrain

The natural replacement for the folder metaphor is the terrain metaphor. Knowledge is a landscape: concepts cluster into ranges, disciplines form mountain ranges separated

by passes, interdisciplinary connections are passes between ranges, and accessibility varies — some regions are densely explored, others are frontiers.

Definition 33.2: Knowledge Terrain

A *knowledge terrain* is an accessibility landscape $S_K : K \to \mathbb{R}$ over a knowledge space K (a metric space of concepts), where $S_K(k)$ measures the number of admissible extensions of concept k — how many novel directions are accessible from k.

Navigation through knowledge terrain uses the same mathematics as navigation through physical terrain: gradient ascent toward accessibility peaks, ridge-following to stay in productive territory, and path-planning that balances exploration (accessing new regions) with exploitation (deepening current regions).

33.3 The Link as the Primary Object

In a knowledge terrain, links (semantic connections between concepts) are as important as nodes (the concepts themselves). A concept with no links to others is a dead end; a concept with many high-quality links is a hub that increases the accessibility of its entire neighborhood.

The Link Priority Principle

In a semantic knowledge system, the value of a concept is not its propositional content alone but the accessibility it provides to neighboring concepts. The semantic value of node k is:

$$V(k) = \sum_{k' \in N(k)} \frac{S_K(k')}{d(k, k')}$$

where $N(k)$ is the neighborhood of k and $d(k, k')$ is semantic distance. High-value concepts are hubs that make many high-accessibility concepts mutually reachable.

Exercise

Compare Wikipedia's organizational structure (categories, templates, infoboxes, links) to a hierarchical file system. Which knowledge topology operations does Wikipedia support? Which does it lack? What would a "Wikipedia 2.0" look like that supports all the operations of the knowledge terrain model?

Exercise

Model your own current knowledge as a knowledge terrain. Identify three accessibility peaks (topics where you know many connected things), three accessibility wells (topics where your knowledge dead-ends), and three potential ridges (connections between topics you know but haven't yet made).

34

Semantic Zoom

Every level of description is correct.
The question is not which level is true
but which level is useful for the current question.
— Flyxion, *Semantic Infrastructure*

Chapter 32 argued for a terrain model of knowledge. This chapter develops the key feature of that terrain: its *multi-scale structure*. The same knowledge can be viewed at different resolutions — from the fine-grained (individual propositions) to the coarse-grained (field-level summaries). Semantic zoom is the operation that moves between these resolutions.

Connects to renormalization tower (Ch. 8) and constraint basins (Ch. 24)

34.1 Scale-Dependent Representations

Every domain of knowledge has a natural hierarchy of scales:

- **Biology:** molecules → cells → tissues → organisms → populations → ecosystems.
- **Physics:** quantum fields → particles → atoms → materials → systems → cosmological structures.
- **History:** events → episodes → periods → eras → civilizational arcs.
- **Mathematics:** lemmas → theorems → theories → fields → mathematical traditions.

Each scale has its own vocabulary, its own causal mechanisms, and its own productive questions. Confusing scales — asking cell-biology questions at the organism level, or organism-level questions at the ecosystem level — produces category errors.

Definition 34.1: Semantic Zoom Operator

A *semantic zoom operator* is a family of projections $\{\pi_s : K \to K_s\}_{s \geq 0}$ where K_s is the representation of knowledge K at scale s. Zooming out ($s \to \infty$) is renormalization: detail is integrated out, coarse features emerge. Zooming in

$(s \to 0)$ is instantiation: abstract concepts are given specific content.

34.2 Micro, Meso, and Macro Views

Three canonical scales appear repeatedly across domains:

- **Micro:** the individual unit — atom, cell, event, lemma. The level of direct observation and experiment.
- **Meso:** the intermediate aggregate — molecule, tissue, episode, theorem. The level where most scientific activity occurs.
- **Macro:** the large-scale pattern — material, ecosystem, era, field. The level where global constraints and tendencies are visible.

Productive research typically moves between scales: a micro observation (an anomalous data point) motivates a meso hypothesis (a new mechanism), which predicts a macro pattern (a new large-scale regularity).

34.3 Context-Sensitive Abstraction

The appropriate scale for a representation depends on the question being asked. This is *context-sensitive abstraction*: the same knowledge is represented at different scales depending on context.

Definition 34.2: Context-Optimal Scale

The *context-optimal scale* for knowledge K in context C is:

$$s^*(K, C) = \arg\max_s I(K_s; \mathcal{Q}_C)$$

where $I(K_s; \mathcal{Q}_C)$ is the mutual information between the scale-s representation of K and the set of questions $\mathcal{Q}_C$ relevant in context C.

Experts have well-calibrated s^*: they know which scale of description is appropriate for each question. Novices often operate at the wrong scale — too much detail when a summary is needed, too much abstraction when a specific example is needed.

The Multi-Scale Principle

Any knowledge system that must answer questions at multiple scales requires explicit semantic zoom capabilities: mechanisms for moving between scales efficiently, and for identifying the context-optimal scale for each query. Systems optimized for a single scale sacrifice performance at all other scales.

Exercise

Take a topic you know well and write three descriptions of it at three different scales (micro, meso, macro), each approximately 100 words. Identify what information is present at each scale and absent at the others. What question is each scale best suited to answer?

Exercise

The internet is a micro-scale knowledge system: individual pages are the primary unit, and large-scale structure must be inferred (through search, navigation, link-following). Design a "macro-layer" for the internet that makes large-scale knowledge structure explicit. What would its data model look like?

35

Knowledge Landscapes

You cannot explore a map by reading its legend.
You explore it by traveling.
The same is true of knowledge.
— Flyxion, *Semantic Infrastructure*

This chapter synthesizes the terrain model of Chapter 32 and the zoom model of Chapter 33 into a unified theory of knowledge landscapes — the geographic metaphor made mathematically precise.

Synthesizes Chs. 32–33 and App. J on accessibility geometry

35.1 Browsing as Navigation

In a physical landscape, navigation involves: knowing your current position, knowing your destination, knowing the terrain between you and the destination, and choosing a path that balances speed, safety, and discovery.

Knowledge browsing is the same process in semantic space. The current position is your current understanding; the destination is the concept you seek to understand; the terrain is the knowledge landscape; the path is the sequence of concepts visited en route.

Definition 35.1: Knowledge Navigation

A *knowledge navigation strategy* is a policy $\pi_K : \mathcal{O}_K \to \mathcal{A}_K$ mapping current knowledge state (what you currently understand) to the next concept to visit. An *accessibility-optimal strategy* maximizes the expected accessibility entropy of the final knowledge state:

$$\pi_K^* = \arg\max_{\pi_K} \mathbb{E}[S_K(k_T) \mid k_0, \pi_K]$$

where k_T is the knowledge state after T navigation steps.

35.2 Maps versus Indexes

Two different metaphors have dominated knowledge organization: the *map* (spatial arrangement of concepts by semantic proximity) and the *index* (alphabetical list of concepts with pointers to content). Each has strengths and weaknesses.

The map reveals structure: which concepts are near each other, which are far, which are at the center of a field and which at the periphery. It supports exploration — you can wander and discover unexpected neighbors. But maps are hard to update (a new discovery may require reshaping the entire landscape), and they are poor at precise retrieval (finding a specific fact requires geographic search).

The index supports precise retrieval but hides structure. An index user looking up "entropy" finds multiple entries (thermodynamic, Shannon, topological) without knowing their relationships. The index does not reveal that thermodynamic and Shannon entropy are deeply related (connected by the same mathematics), that topological entropy generalizes both, or that all three connect to the accessibility entropy of this monograph.

A knowledge landscape system requires both: the navigational richness of a map and the retrieval precision of an index, with each informing the other.

35.3 Exploration and Exploitation in Knowledge

The exploration-exploitation tradeoff (Chapter 37) applies directly to knowledge navigation.

- **Exploration:** visiting unfamiliar concepts, building new connections, expanding the accessible knowledge landscape. High variance, potentially high reward.
- **Exploitation:** deepening understanding of familiar concepts, strengthening existing connections, refining current knowledge. Low variance, reliable return.

The optimal strategy depends on the agent's current position in the knowledge landscape and their goals. An agent near an accessibility well (a dead end) should explore more; an agent near an accessibility peak (a productive hub) can afford to exploit.

35.4 Semantic Terrain and Physical Terrain

The analogy between semantic and physical terrain is not merely metaphorical — it is structural. Both are instances of the same underlying mathematical object: an accessibility landscape with gradient flow, wells, peaks, and ridges.

The shared mathematics implies shared navigation strategies. Techniques developed for physical terrain navigation (A* search, potential fields, topological path planning)

transfer to semantic terrain navigation. And insights from knowledge navigation (the value of hubs, the cost of dead ends, the utility of ridges) transfer back to physical terrain planning.

This bidirectional transfer is an instance of the projection engine principle (Chapter 16): two apparently different domains are projections of the same underlying accessibility geometry.

Exercise

Model the history of physics as a knowledge landscape. Identify the three largest accessibility peaks (most productive hubs), the three deepest accessibility wells (research programs that dead-ended), and the three most important ridges (connections between subfields that opened new directions).

Exercise

Design a "semantic GPS" system for academic research. Given a current knowledge position (a set of papers the researcher has read) and a destination (a research question), how would your system plan a reading path through the knowledge landscape? What data would it need?

36

Interfaces as Cognitive Prosthetics

A good interface does not translate your intentions into machine actions.
It extends the space of intentions you can have.
— Flyxion, *Semantic Infrastructure*

The previous three chapters developed the theory of knowledge navigation. This chapter examines the interfaces through which humans navigate: not as passive tools that execute commands but as cognitive prosthetics that extend the agent's projection structure.

Connects to projection-based consciousness (Ch. 22) and constraint spaces

36.1 Tools That Extend Memory

The constraint-preserving memory chain of Chapter 23 is biological: it lives in neural tissue and dies with the agent. External tools extend this chain into physical space, where it can survive the agent and be accessed by others.

Definition 36.1: Memory Prosthetic

A *memory prosthetic* is any external artifact that encodes constraint modifications $\Delta\mathcal{C}$ in a retrievable form. Its effectiveness is measured by:

- **Encoding fidelity:** how accurately it represents $\Delta\mathcal{C}$.
- **Retrieval efficiency:** how quickly the encoded constraint modification can be recovered and applied.
- **Durability:** how long the encoding persists.
- **Portability:** how easily the encoding can be transferred to new contexts.

Writing is the foundational memory prosthetic: high encoding fidelity, moderate retrieval efficiency (requires reading), high durability, high portability. Digital storage improves retrieval efficiency dramatically but at the cost of technological dependence: the encoding requires an interpreter (software, hardware) that may not persist.

36.2 Tools That Extend Attention

Attention is the agent's mechanism for allocating cognitive resources — for deciding which features of the current observation to process in depth. Interfaces that extend attention allow the agent to maintain focus on more features simultaneously, or to maintain focus for longer.

Definition 36.2: Attention Prosthetic

An *attention prosthetic* is an interface that reduces the cognitive cost of directing attention to specific features of the environment. Its effectiveness is measured by:

$$E_{\text{att}} = \frac{\Delta I_{\text{attended}}}{\Delta \kappa_{\text{cognitive}}}$$

— the increase in attended information per unit increase in cognitive constraint violation (cognitive load).

Good visualization tools are attention prosthetics: they make structure visible that would otherwise require sustained mental effort to construct. A good graph reveals in a glance what a table of numbers reveals only after minutes of computation.

36.3 Tools That Extend Reasoning

The most powerful cognitive prosthetics extend not just memory or attention but reasoning itself: they change what inferences are accessible, what concepts can be combined, what questions can be asked.

Mathematical notation is the canonical example. A student who knows Arabic numerals and positional notation can perform calculations that a student who knows only Roman numerals cannot — not because they are smarter, but because the notation makes certain operations cognitively accessible that are inaccessible in the other system.

The Cognitive Prosthetic Principle

The cognitive prosthetics available to an agent determine the accessible region of their cognitive landscape. The accessibility entropy of an agent's cognitive state is:

$$S_{\text{cog}}(A) = S_{\text{bio}}(A) + \sum_i S_{\text{prosthetic}}(P_i)$$

— the sum of the agent's biological accessibility and the accessibility contributed by each prosthetic P_i in their toolkit. Cognitive development is the acquisition of

high-$S_{\text{prosthetic}}$ tools.

Exercise

Evaluate the following tools as cognitive prosthetics: (a) a physical notebook, (b) a spreadsheet, (c) a programming language, (d) a diagram, (e) a conversational AI assistant. For each, estimate E_{att} and $S_{\text{prosthetic}}$ informally. Which extends reasoning most? Which has the highest failure modes?

Exercise

The abacus and the calculator both extend arithmetic reasoning. Compare them as cognitive prosthetics. Which has higher encoding fidelity? Which has higher retrieval efficiency? Which produces better long-term mathematical understanding? Explain the tradeoffs using the framework of this chapter.

Part XI

The Architecture of Learning

37

Learning as Infrastructure

Learning is not filling a container.
It is building a city —
always half-finished, always expanding,
always requiring maintenance.
— Flyxion, *Semantic Infrastructure*

The accessibility framework gives us a precise way to understand learning: it is not information transfer (pouring knowledge from teacher to student) but *infrastructure construction* (building the constraint structures that make new knowledge accessible).

Connects to App. N on learning geometry; Ch. 23 on memory chains

37.1 Knowledge Accumulation

Learning accumulates constraint modifications into a personal knowledge infrastructure. Each new concept learned modifies the constraint set in ways that make some future concepts easier to learn (more accessible) and others harder (now inconsistent with established beliefs).

Definition 37.1: Knowledge Infrastructure

An agent's *knowledge infrastructure* at time t is the pair $(\mathcal{C}(t), S_K(t))$: the current constraint set and the accessibility landscape it induces. The infrastructure determines what new concepts can be learned (those with high S_K relative to the current constraint set) and at what cost.

This explains why prerequisites matter. Learning calculus without algebra is difficult not because calculus is intrinsically harder, but because the accessibility of calculus concepts depends on the constraint structures that algebra builds. Algebra makes calculus accessible; without it, calculus concepts have near-zero accessibility in the learner's knowledge infrastructure.

37.2 Maintenance Costs

Knowledge, like physical infrastructure, requires maintenance. Concepts not visited decay (Chapter 23). Connections not reinforced weaken. Beliefs not updated drift from the current state of knowledge.

The total maintenance cost of a knowledge infrastructure is:

$$\kappa_{\text{maint}}(\mathcal{C}, t) = \sum_{c \in \mathcal{C}} \text{decay}(c, t) \cdot \text{importance}(c)$$

where $\text{decay}(c, t)$ is the rate at which constraint c weakens without reinforcement. High-importance, high-decay constraints (foundational concepts in fast-moving fields) require frequent maintenance.

37.3 Forgetting as Accessibility Pruning

Forgetting is often viewed negatively — as failure of the memory system. The accessibility framework suggests a more nuanced view: forgetting is *accessibility pruning*, the removal of low-value constraints to preserve the structural integrity of the knowledge infrastructure.

Proposition 37.1: Adaptive Forgetting

In a knowledge infrastructure with finite maintenance capacity B (total cognitive budget), optimal forgetting drops constraints c with low $\text{value}(c)/\text{decay}(c)$ — those that are costly to maintain relative to their contribution to S_K.

This explains why we forget details (high decay, low value) while retaining structure (low decay, high value). The structure of algebra persists even when specific problem solutions are forgotten; the structure enables reconstruction of details when needed.

37.4 Reconstruction over Retention

A mature knowledge infrastructure is not characterized by the retention of large volumes of information but by the ability to reconstruct needed information from structure. The expert mathematician who cannot recall a specific theorem can re-derive it; the expert physician who cannot recall a drug interaction can look it up and immediately integrate it with their existing knowledge.

The Reconstruction Principle

A robust knowledge infrastructure prioritizes the retention of high-level constraint structures (schemas, frameworks, principles) over the retention of specific facts. Facts are reconstructible from structure; structure is not reconstructible from facts alone. The value of learning a fact is proportional to its contribution to structural constraint modifications.

Exercise

You are designing a curriculum for a 10-year, full-time mathematics education. Using the knowledge infrastructure model, what should be the primary goal of years 1–3 (foundation), 4–7 (expansion), and 8–10 (integration)? How does your design differ from a typical university mathematics curriculum?

Exercise

Model the knowledge infrastructure of a first-year medical student versus a 20-year experienced physician. What are the key structural differences? Where does the physician's infrastructure support reconstruction that the student's does not?

38

Exploration versus Exploitation

The explorer who never settles learns everything about everything
and masters nothing.
The expert who never explores masters one world
and misses all the others.
Wisdom is the calibration between them.

— Flyxion, *Semantic Infrastructure*

The exploration-exploitation tradeoff is one of the deepest recurring problems in learning, decision theory, and evolutionary biology. In the knowledge infrastructure framework, it takes a precise form: given a finite maintenance budget, how should an agent allocate effort between exploring new regions of the knowledge landscape (building new connections) and deepening existing regions (strengthening established structures)?

App. N §N.16 on the exploration-exploitation tradeoff in curricula

38.1 Discovery

Discovery is the acquisition of genuinely new constraints: knowledge that was not previously representable in the agent's infrastructure. It requires leaving the current high-accessibility regions and venturing into lower-accessibility territory where new structure may be found.

Definition 38.1: Epistemic Exploration

An agent is in *epistemic exploration mode* when it preferentially visits concepts k with high uncertainty $\sigma_K(k)$ (unknown territory) over concepts with high current accessibility $S_K(k)$ (familiar territory). The exploration bonus is:

$$\mathrm{UCB}(k) = S_K(k) + \beta \cdot \sigma_K(k)$$

(Upper Confidence Bound), where β controls the exploration-exploitation tradeoff.

38.2 Practice

Practice is the reinforcement of existing structures: visiting known concepts to reduce their decay rate, strengthen their connections to neighboring concepts, and increase the precision of the associated constraint modifications.

Definition 38.2: Deliberate Practice

Deliberate practice is practice at the boundary of current competence: visiting concepts just beyond the current high-accessibility region, where the constraint modifications are not yet robust. Formally, it targets concepts with moderate current accessibility $S_K(k)$ (accessible but not automatic) and high rate-of-improvement $\partial S_K(k)/\partial t$ under practice.

This formalizes the pedagogical observation that learning happens at the edge of competence. Too easy (within the high-accessibility region) produces no new constraint modifications; too hard (far outside it) produces confusion and anxiety. The productive zone is the boundary.

38.3 Mastery and Novelty

Mastery is the state where a concept's accessibility is so high that it requires minimal maintenance and can be used automatically in other contexts. A master has high-S_K coverage of their domain and can freely combine concepts from different parts of it.

Novelty is the state where a concept has been recently acquired and is not yet well-integrated into the knowledge infrastructure. Novel concepts have high potential (they may open new regions) but high uncertainty (their full implications are not yet clear).

The Exploration-Exploitation Theorem for Learning

An agent with finite learning time T and knowledge infrastructure $(\mathcal{C}, S_K)$ should allocate time T_{explore} to exploration and T_{exploit} to exploitation in proportion to:

$$\frac{T_{\text{explore}}}{T_{\text{exploit}}} = \frac{\max_k \sigma_K(k)}{S_K(k^*)_{\text{avg}}}$$

— the ratio of maximum uncertainty to average current accessibility. Early in learning (high uncertainty, low accessibility), explore more. Late in learning (low uncertainty, high accessibility), exploit more.

Exercise

Track your own learning behavior for one week. For each study or reading session, classify it as primarily exploration (new territory) or exploitation (reinforcing existing knowledge). Are you in the right regime for your current stage of learning? What would the Exploration-Exploitation Theorem prescribe?

Exercise

Scientific fields go through cycles of exploration (paradigm shifts, new methods) and exploitation (normal science, application of established methods). Identify a field you know well and describe its current exploration-exploitation balance. Is it in the right regime? What would shift it?

39

Organizing a Mind

The mind is not a library.
It is a living city:
some districts thriving, some decaying,
connected by roads of varying reliability,
always under construction.
— Flyxion, *Semantic Infrastructure*

Having established what learning is (infrastructure construction), what its dynamic is (exploration-exploitation), and what tools extend it (cognitive prosthetics), this chapter turns to the practical question: how should a mind organize itself?

Connects to Ch. 23 memory chains and Ch. 32 beyond files and folders

39.1 Notes

External notes are memory prosthetics (Chapter 35): they extend the biological memory chain into physical or digital space. But different note-taking systems implement different cognitive architectures.

- **Linear notes** (sequential writing): implement a 1D memory chain. Easy to produce, hard to navigate. Good for capturing temporal sequence (lecture notes, journal entries).
- **Hierarchical notes** (outlines, nested folders): implement a tree. Better than linear for structure, but imposes a single categorization. The same problem as file systems: concepts belong to multiple categories.
- **Networked notes** (Zettelkasten, wiki-style): implement a graph. Each note is a node; links are edges. Supports the full topology of knowledge. Harder to maintain but much richer in structure.
- **Spatial notes** (mind maps, concept maps): implement a geometric arrangement. Visual proximity encodes semantic proximity. Supports intuitive navigation but poor at precise retrieval.

The networked note system implements the knowledge landscape of Chapter 34: a graph of concepts linked by semantic relationships, navigable by following high-accessibility paths.

39.2 Memories

Memories, unlike notes, are not explicitly organized — they are implicitly organized by the constraint structure they form part of. But the agent can influence this organization through *encoding strategies*: practices that increase the depth and connectivity of memory traces.

Definition 39.1: Encoding Depth

The *encoding depth* of an experience E is the number of constraint modifications $|\Delta\mathcal{C}|$ it induces — how many existing concepts are connected to and modified by the new experience. Shallow encoding ($|\Delta\mathcal{C}|$ small) produces weak, isolated memories; deep encoding produces strong, well-connected ones.

Elaborative rehearsal (connecting new information to existing knowledge), self-explanation (articulating what a concept means in your own terms), and testing (attempting to retrieve and apply knowledge) all increase encoding depth. They increase $|\Delta\mathcal{C}|$ by forcing the new information into contact with existing constraint structures.

39.3 Projects

Projects are extended goal-directed activities that require sustained access to a specific subset of the knowledge infrastructure. Managing projects requires managing which parts of the knowledge infrastructure are currently active — which constraints are in working memory versus which are in long-term storage.

Definition 39.2: Project as Cognitive Context

A *project context* is a subset $\mathcal{C}_P \subset \mathcal{C}$ of the full constraint set, activated specifically for a project P. The *context switch cost* when moving between projects P_1 and P_2 is proportional to $|\mathcal{C}_{P_1} \setminus \mathcal{C}_{P_2}|$ — the constraints that must be deactivated and reactivated.

This formalizes the cost of multitasking: each context switch requires deactivating one project's constraint context and reactivating another's. Deep work (sustained attention to a single project) minimizes context switch costs and allows the full constraint context to be active, enabling the most complex inferences.

39.4 Archives

Archives are the long-term storage tier of the personal knowledge infrastructure: the repository of constraint modifications that are important but not currently active. A well-maintained archive has:

- High retrieval efficiency (quick access when needed),
- Good index structure (easy to find relevant constraints),
- Regular maintenance (constraints updated as knowledge evolves),
- Appropriate decay management (important constraints retained, trivial ones allowed to decay).

The Personal Knowledge Infrastructure Principle

An agent's cognitive performance is bounded by the quality of their personal knowledge infrastructure: notes (extended memory), encoding practices (memory depth), project management (context efficiency), and archive maintenance (long-term retention). Optimizing any one tier in isolation is less effective than optimizing the interfaces between tiers.

Exercise

Audit your current personal knowledge infrastructure. For each tier (notes, active memory, projects, archive), identify its current implementation, its strengths, and its weakest point. Design one specific improvement to the interface between two tiers.

Exercise

Compare two famous intellectual workers known for prolific output: Charles Darwin (extensive notebooks, structured correspondence, decades-long project management) and Nikola Tesla (claimed to work almost entirely in mental simulation with minimal notes). What does each approach imply about their personal knowledge infrastructure? What are the failure modes of each?

40

Read–Evaluate–Print Loops

The REPL is the purest form of learning:
propose, test, observe, revise.
All education is a REPL with a very slow clock.
— Flyxion, *Semantic Infrastructure*

The *Read-Evaluate-Print Loop* (REPL) is a programming paradigm: the computer reads a statement, evaluates it, prints the result, and waits for the next statement. It makes computation interactive and incremental rather than batch-compiled.

Connects to Spherepop evaluation dynamics (Ch. 6) and constraint descent

This chapter argues that the REPL is not a programming metaphor for learning — it is the fundamental structure of learning itself. All genuine learning is a REPL with varying loop parameters: different latencies, different feedback mechanisms, different output channels.

40.1 Feedback Cycles in Learning

Effective learning requires rapid, accurate feedback. The feedback cycle — propose something (a belief, an action, a model), observe the consequences, update the constraints accordingly — is the engine of constraint modification.

Definition 40.1: Learning REPL

A *learning REPL* is a feedback system (P, E, O, U) where:

- P is the *proposer*: generates a hypothesis or action from the current constraint set,
- E is the *evaluator*: applies the hypothesis and generates feedback,
- O is the *observer*: processes the feedback into a constraint modification $\Delta\mathcal{C}$,
- U is the *updater*: applies $\Delta\mathcal{C}$ to the current constraint set.

The *loop latency* τ is the time from proposal to constraint update.

The power of the REPL metaphor is that it makes loop latency explicit. Different learning

modalities have different latencies:

- **Programming REPL:** $\tau \approx$ milliseconds.
- **Laboratory experiment:** $\tau \approx$ hours to weeks.
- **Clinical trial:** $\tau \approx$ years.
- **Societal experiment:** $\tau \approx$ decades.
- **Evolutionary learning:** $\tau \approx$ generations.

Shorter latency produces faster constraint modification — faster learning. This is why programming is such an effective learning environment: the loop latency is so short that hundreds of hypothesis-test cycles can occur in an hour.

40.2 Revision Systems

Many learning systems have developed explicit revision mechanisms — structured processes for revisiting and updating earlier constraint modifications.

- **Spaced repetition:** revisit concepts at increasing intervals, calibrated to the forgetting curve. Optimizes maintenance cost by timing reinforcement to just before the constraint modification would decay below threshold.
- **Peer review:** external evaluation of proposed constraint modifications (papers, ideas, arguments) before integration into the knowledge infrastructure. Reduces the propagation of incorrect modifications.
- **Version control:** explicit tracking of constraint modification history, allowing rollback when a modification proves incorrect.

40.3 Constraint-Guided Growth

The most effective learning is not random exploration but *constraint-guided growth*: the current constraint structure identifies which new constraints are most accessible (near the current knowledge infrastructure) and most valuable (high accessibility entropy contribution).

The REPL Learning Principle

Learning efficiency is maximized when: (1) loop latency is minimized (feedback is fast), (2) feedback accuracy is maximized (the evaluator is reliable), (3) constraint modification is proportional to feedback strength (appropriate learning rate), and (4) proposed hypotheses are constraint-guided (near the current accessibility

boundary). Systems satisfying all four conditions learn at the theoretical maximum rate for their domain.

Exercise

Design a REPL for learning a foreign language. What plays the role of the proposer, evaluator, observer, and updater? What is the loop latency? How would you minimize latency while maintaining feedback accuracy?

Exercise

Science is a collective REPL. Identify the proposer (researchers), evaluator (experiments, peer review), observer (the scientific community), and updater (textbook revision, paradigm shifts). Where are the longest latencies in this system? What reforms would reduce them without sacrificing accuracy?

Synthesis

The REPL, the Spherepop pop operator, and the constraint descent flow all describe a similar process: proposals are evaluated, constraint violations are reduced, and the system converges. Write out the formal correspondence between these three systems. What is the common abstract structure they all instantiate?

Part XII

Simulated Worlds

41

Games as Cognitive Laboratories

A game is a system of pure constraint.
Its pieces have no meaning outside the rules.
Its meaning is entirely in the rules.
This is why play is the best teacher.
— Flyxion, *Semantic Infrastructure*

Part XII examines simulated worlds. This chapter argues that games — from chess to complex simulations — are cognitive laboratories: designed environments that make the REPL of Chapter 39 maximally effective by providing immediate, accurate, unambiguous feedback within a well-defined constraint structure.

Connects to REPL loops (Ch. 39) and accessibility landscapes (Ch. 14)

41.1 Why Games Teach

Games are effective learning environments for a precise reason: they implement high-quality REPLs. The four conditions of the REPL Learning Principle (Chapter 39) are satisfied:

1. **Minimal latency:** feedback is immediate — you see the result of your move at once.
2. **Maximum accuracy:** the rules are unambiguous — the game state evolves deterministically (in most games).
3. **Proportional learning:** good moves are rewarded, bad moves are penalized, intermediate moves get intermediate outcomes.
4. **Constraint-guided exploration:** the rules define which moves are available — exploration is bounded by the constraint space.

The result is that skills learned in games transfer (to the extent that the game's constraint structure is shared with the real-world domain). Chess players develop pattern recognition for strategic threats; medical simulation players develop diagnostic reasoning; Minecraft players develop spatial reasoning and resource management.

41.2 Artificial Constraints as Epistemic Tools

The constraints of a game are artificial: no physical law requires that bishops move diagonally. But artificial constraints are epistemically valuable precisely because they are *clean*: they are fully specified, consistently applied, and free of the noise and ambiguity of real-world constraints.

Definition 41.1: Artificial Constraint Space

An *artificial constraint space* is a constraint space (X, A, κ) where:

- X is a designed state space (positions in a game, choices in a simulation),
- A is defined by explicit rules (legal moves, valid actions),
- κ measures rule violations (illegal moves penalized).

Artificial constraint spaces are valuable as learning environments because κ is computable, A is precisely defined, and feedback on κ is immediate.

41.3 Exploration Under Rules

Games enforce exploration through their rule structures: you cannot learn chess by playing the same opening every game — the opponent's responses force you into unfamiliar positions, expanding your exploration of the game's accessibility landscape.

This forced exploration is a feature, not a bug. The best games are those whose accessibility landscape is rich enough that exploration never exhausts it — chess has been played for 1500 years and new patterns are still being discovered.

The Cognitive Laboratory Principle

A game functions as a cognitive laboratory to the degree that its constraint space is: (1) rich enough to contain the relevant features of the target domain, (2) clean enough to provide unambiguous feedback, and (3) bounded enough to make exploration tractable. Games that satisfy all three are powerful cognitive prosthetics for developing expertise in the target domain.

Exercise

Analyze the game of Go as a cognitive laboratory for the domain of strategic territorial competition. What features of real strategic competition does Go's constraint structure capture? Which does it omit? What skills learned in Go transfer to real strategic contexts?

Exercise

Design a game that functions as a cognitive laboratory for learning the concept of accessibility landscapes. What would the game state be? What would the rules (constraints) be? How would the game teach players to navigate toward accessibility peaks and avoid wells?

42

Procedural Universes

A procedurally generated world is not a copy of the real world.
It is a theory of the real world:
a set of rules that produces worlds
like this one.

— Flyxion, *Semantic Infrastructure*

Procedural generation — the creation of content through algorithms rather than explicit design — is one of the most intellectually rich areas of game design and computer graphics. This chapter examines it through the lens of the accessibility framework.

Connects to RSVP field equations (Ch. 18) and constraint ecology (Ch. 26)

42.1 Generation

A procedural generator is a constraint satisfaction system: given a set of high-level constraints ("generate a dungeon that is winnable, interesting, and of approximately level 5 difficulty"), it produces specific instantiations (a particular dungeon layout) that satisfy them.

Definition 42.1: Procedural Generator

A *procedural generator* is a map $G : \Theta \times \mathcal{R} \to W$ where Θ is a parameter space (constraints), $\mathcal{R}$ is a randomness source (seeds), and W is a space of worlds. The generator is *good* if: (1) all generated worlds satisfy the constraints, and (2) the distribution over worlds is diverse (high entropy given the constraints).

42.2 Emergence

The most interesting procedural worlds exhibit emergence: global structure that arises from local rules without being explicitly specified. Cellular automata (Conway's Game of Life), L-systems (plant growth), and agent-based simulations all produce emergent

structures.

Emergence is the procedural version of the RSVP accessibility relaxation: local constraint satisfaction rules (cells reproduce if they have 2–3 neighbors) produce global accessible patterns (gliders, oscillators, stable configurations) that persist because they are attractors in the accessibility landscape of the rule system.

42.3 Constraint Satisfaction in World Construction

The constraint satisfaction approach to procedural generation makes the accessibility framework explicit:

- **High-level constraints:** the world must be habitable, have a balanced ecosystem, have navigable terrain.
- **Low-level generation:** tile placement, creature population, resource distribution.
- **Validation:** constraint violation check — does the generated world satisfy the high-level constraints?
- **Repair:** if not, modify the low-level generation to reduce constraint violation (constraint descent).

This is the Spherepop evaluation of world construction: the high-level constraints are the outer spheres; the low-level details are the inner spheres; generation is evaluation (collapse) from inside out.

Exercise

Describe the constraint space for generating a believable ecological system: predator-prey relationships, carrying capacity, seasonal variation, evolutionary pressure. What are the minimum constraints needed to produce ecologically plausible behavior? What emergent structures arise from these constraints?

Exercise

The No Man's Sky universe (18 quintillion planets) is procedurally generated from a seed plus rules. Using the accessibility framework, explain why many players found the universe "empty" despite its size. What constraints were missing? What accessibility landscape would a more engaging procedural universe require?

43

Virtual Ecology

A simulation that does not surprise you
is not a simulation.
It is a description.
— Flyxion, *Semantic Infrastructure*

Chapter 41 developed procedural generation as constraint satisfaction. This chapter examines the emergent communities — virtual ecologies — that arise in richly constrained simulated environments, and what they reveal about real ecologies.

Connects to constraint ecology (Ch. 26) and accessibility fields (App. J)

43.1 Agents and Resources

A virtual ecology begins with two primitive elements: agents (entities that act) and resources (quantities that agents consume and produce). The constraint structure governing their interaction determines what ecologies emerge.

Definition 43.1: Virtual Ecology

A *virtual ecology* is a dynamical system (A, R, E, κ_E) where:

- $A = \{a_1, \dots, a_n\}$ is a set of agents with strategies $\pi_i : \mathcal{O}_i \to \mathcal{A}_i$,
- $R = \{r_1, \dots, r_m\}$ is a set of resources,
- $E : A \times R \to \mathbb{R}$ is the exchange matrix (how much of each resource each agent type consumes and produces),
- κ_E is the ecological constraint functional (resource levels must remain non-negative; population levels must be non-negative).

43.2 Adaptation

In biological ecologies, adaptation occurs through evolution: agents with higher-fitness strategies reproduce more. In virtual ecologies, adaptation can be implemented directly:

agent strategies update in response to outcomes.

The accessibility framework gives a precise interpretation: adaptation is constraint descent in the strategy space. Agents move toward strategies that minimize their constraint violation (maximize survival and reproduction) given the current state of the ecology.

43.3 Civilizations

When virtual agents develop complex strategies — division of labor, trade, coordination, conflict — virtual civilizations emerge. The transition from ecology to civilization is a phase transition in the accessibility landscape: new basins appear (stable social structures) that were not present in the pre-civilizational ecology.

The Civilization Emergence Theorem (Virtual)

In a virtual ecology with sufficient agent capability (complex strategies) and resource diversity (multiple resource types with complementary advantages), civilization-like structures emerge as accessibility attractors: stable configurations where specialization and exchange reduce total constraint violation below what any single agent strategy can achieve.

Exercise

Describe the minimal virtual ecology that produces civilization-like trade. What resource types are needed? What agent capabilities? What constraint structure produces the emergence of specialization?

Exercise

Many virtual civilizations in games (Civilization, Crusader Kings, Dwarf Fortress) exhibit "emergent stories" — narratives that arise from the interaction of rules rather than being scripted. Using the accessibility framework, explain what makes a game rich enough to produce emergent stories. What structural property distinguishes story-rich from story-poor games?

44

The Universe as a Simulation Medium

We do not simulate the universe to understand it.
We simulate the universe to understand ourselves:
what we expect, what we assume, what we forget to include.
— Flyxion, *Semantic Infrastructure*

This chapter closes Part XII by connecting the simulation theme back to the cosmological framework of Part V. The universe is not merely a subject of simulation — it is, in the RSVP framework, itself a kind of simulation medium: a field-theoretic system that generates accessible configurations through constraint relaxation.

Connects to RSVP cosmology (Chs. 18–21) and simulated agency (Ch. 22)

44.1 Not Simulation Theory

This chapter does not endorse the simulation hypothesis — the claim that we live inside a computer simulation run by some external intelligence. That hypothesis is unfalsifiable, metaphysically extravagant, and explanatorily vacuous: it relocates the question of why the universe exists without answering it.

What this chapter does claim is more modest and more precise: simulation is an *epistemic technique*. Building a simulation of a system reveals the assumptions embedded in our model of it — what we have included, what we have excluded, and what surprises arise from the interaction of the included parts.

44.2 Simulation as Epistemic Technique

Definition 44.1: Epistemic Simulation

An *epistemic simulation* of system S is a model $\hat{S}$ that: (1) implements the known constraint structure of S, (2) is run forward in time to produce accessible configurations, and (3) is compared to observed configurations of S to identify model gaps — constraints present in S but missing from $\hat{S}$.

The gap between simulation and reality is epistemically rich: it identifies what the model is missing. A climate simulation that fails to reproduce observed precipitation patterns reveals that some constraint on atmospheric moisture is not correctly modeled. A social simulation that fails to reproduce observed segregation reveals that some preference or constraint is not correctly modeled.

44.3 Building Worlds to Understand Worlds

The RSVP accessibility framework itself is an epistemic simulation of the universe: a model whose constraint structure (coupled Φ, $\mathbf{v}$, S fields with accessibility relaxation dynamics) is designed to reproduce cosmological observations. Where the RSVP simulation fails to match observations, the model has missing constraints.

This methodology — simulate, compare, identify gaps, extend the model — is the scientific method applied to cosmology. The universe is not merely the subject of the simulation; it is the ground truth against which the simulation is validated.

The Simulation Epistemic Principle

The value of a simulation is proportional to the quality of the constraints it implements and inversely proportional to the cost of identifying its gaps. A good simulation fails *informatively*: its failures reveal specific, testable hypotheses about what the model is missing.

Exercise

The RSVP framework makes specific predictions that differ from ΛCDM cosmology (Chapter 20). Design an observational test that would distinguish between the two. What data would be needed? What would a RSVP-consistent result look like? What would a RSVP-inconsistent result look like?

Exercise

Agent-based social simulations often fail to reproduce the fat-tailed distributions (power laws) observed in real social phenomena (wealth, city sizes, conflict casualties). What constraint is typically missing from these models? Propose an addition to the agent constraint structure that would produce power-law behavior.

Part XIII

Universal Classification

45

The Search for Shared Structure

The deepest scientific discoveries are not new facts
but the recognition that two facts,
long considered separate,
are the same fact in different clothing.
— Flyxion, *Semantic Infrastructure*

Part XIII turns to universal classification. This chapter examines the most productive pattern in the history of mathematics and science: the discovery that patterns recur across domains — that the same structure appears in quantum mechanics, evolutionary biology, linguistics, and economics, not by coincidence but because all four are projections of a common underlying structure.

Connects to the projection engine (Ch. 16) and homotopy merges (Ch. 25)

45.1 Patterns That Recur Across Domains

The history of mathematics is largely a history of recognizing shared structure:

- **Group theory** (1830s): the structure of permutations, crystal symmetries, and number theory are the same abstract structure — a group — expressed in different contexts.
- **Information theory** (1948): the structure of reliable communication, statistical inference, and thermodynamic entropy are the same abstract structure — Shannon entropy.
- **Category theory** (1945): the structure of sets, groups, topological spaces, and logical theories are all categories — mathematical structures are organized by the morphisms between them, not by their objects.

In each case, the discovery of shared structure was not a simplification of reality but a deepening: two apparently different domains were shown to be projections of a single richer structure.

45.2 Analogical Reasoning

The process of discovering shared structure begins with analogy: the observation that two things behave similarly in some respects. Analogies are hypotheses that a shared structure exists, to be confirmed or refuted by finding the precise common structure.

Definition 45.1: Structural Analogy

A *structural analogy* between domains D_1 and D_2 is a partial isomorphism $\phi : S_1 \to S_2$ between substructures $S_1 \subseteq D_1$ and $S_2 \subseteq D_2$. The analogy is *deep* if ϕ extends to a full isomorphism; *superficial* if it does not extend beyond the initially observed substructure.

Deep analogies are scientifically productive: they predict that theorems proved in D_1 will have counterparts in D_2, and that methods developed for D_1 will transfer to D_2. Superficial analogies produce misleading predictions when the extension fails.

45.3 Cross-Disciplinary Transfer

Conceptual Aside: Memoization as Civilizational Infrastructure

A deep instance of structural recurrence across domains is the concept of *memoization*: storing the result of an expensive computation so it need not be repeated. In computer science, memoization is an optimization technique. In civilization, it is the engine of progress.

The HYDRA formulation: A computation is a traversal of a constraint manifold. The first traversal incurs the full informational and energetic cost — a new trajectory must be carved through uncharted territory. But the traversal leaves behind a *stabilized field residue*: an admissibility shortcut that future traversers can use directly.

- The Pythagorean theorem was the first traversal. Every subsequent student who learns it projects directly into the admissibility basin left by its first discoverers.
- Newton's laws memoize centuries of astronomical observation.
- Legal precedent memoizes the outcome of repeated social disputes.
- Spoken words are the ultimate memoization: each word is a compressed shortcut activating a shared resonance structure in a community's distributed cognitive manifold.

Civilization is the process of increasing the density of memoized constraint

residues — stacking admissibility shortcuts so that survival problems once solved at enormous cost can be solved instantly through shared resonance.
The structural recurrence: memoization appears in computation, in biological evolution (instinct as memoized ancestral learning), in cultural transmission, and in RSVP field dynamics (stable structures are the universe's memoized solutions to constraint satisfaction problems). All are the same abstract operation — *residue of traversal* — instantiated in different substrates.

The accessibility framework provides a metric for analogy depth: two domains share deep structure to the degree that their accessibility landscapes are isomorphic — to the degree that the same constraint structures, the same gradient flows, and the same attractor configurations appear in both.

The Structural Recurrence Theorem

Patterns recur across domains because distinct physical, biological, social, and cognitive systems are subject to the same abstract constraints: accessibility optimization, constraint satisfaction, compositional structure, and stability under perturbation. Systems that solve the same abstract constraint problem develop the same abstract structure, regardless of their physical substrate.

Exercise

The Lotka-Volterra equations for predator-prey dynamics have the same mathematical structure as certain models in economics (competitive market dynamics) and epidemiology (SIR models). Identify the structural analogy precisely: what are the corresponding elements in each domain? Is the analogy deep or superficial? What predictions does the analogy generate?

Exercise

This monograph argues that Spherepop (discrete evaluation), RSVP (continuous field theory), gesture theory (motor cognition), and semantic infrastructure (knowledge organization) are all projections of the same accessibility geometry. Write a 500-word argument for why this claim is deep (not superficial). What specific theorems from one domain transfer to the others?

46

Morphological Taxonomy

Classification is not the end of understanding.
It is the beginning.
A good classification reveals
why the things in one class
behave the way they do.
— Flyxion, *Semantic Infrastructure*

Chapter 44 examined structural recurrence — how the same structure appears across domains. This chapter examines the formal theory of classification itself: what makes a good taxonomy, how shapes and functions constrain each other, and how the constraint framework provides a principled basis for classification.

Connects to canonical forms (Ch. 4) and constraint spaces (App. A)

46.1 Shape, Function, Behavior, Constraint

Traditional classification schemes have emphasized shape (morphology), function (what something does), behavior (how it acts), and increasingly, genetic or compositional structure. Each reveals different aspects of the underlying reality.

Definition 46.1: Morphological Equivalence Class

Two systems s_1, s_2 belong to the same *morphological equivalence class* if there exists an isomorphism $\phi : s_1 \to s_2$ that preserves the relevant structural features (shape, topology, connectivity, constraint structure). The equivalence class $[s]$ is the morphological type.

The "relevant structural features" depend on the classification goal. Anatomical classification preserves gross morphology (bone structure, organ arrangement). Functional classification preserves input-output behavior. Constraint classification preserves the constraint structure — which configurations are admissible and which are not.

46.2 When Categories Fail

Every classification system fails at boundaries. The species concept fails at ring species (populations that form a continuous chain with fertile hybridization but whose ends cannot interbreed). The country concept fails at disputed territories. The "word" concept fails at clitics, compounds, and phrasal idioms.

Definition 46.2: Category Boundary Failure

A classification system $\mathcal{T}$ exhibits *boundary failure* at item x if: (1) x partially satisfies the criteria for category C_1 and partially satisfies the criteria for category C_2, and (2) the criteria for C_1 and C_2 are jointly unsatisfiable for any single item. The failure reveals that $\mathcal{T}$'s categories are not constraint-closed.

The resolution in each case is the same: recognize that the boundary case reveals a hidden dimension — a feature that the binary categorization was suppressing. Ring species reveal the temporal dimension of speciation; disputed territories reveal the political dimension of geography; clitics reveal the prosodic dimension of word structure.

46.3 Functional Classification

The RSVP framework suggests a classification principle that unifies shape, function, behavior, and constraint: classify by the accessibility landscape. Systems with similar accessibility landscapes — similar constraint structures, similar gradient flows, similar attractors — are in the same morphological class regardless of their physical substrate.

The Functional Morphology Principle

The deepest classification of a system is by its accessibility landscape: the structure of its constraint space, admissible states, and gradient flow. Systems that differ in physical substrate but share an accessibility landscape are functionally equivalent and will exhibit analogous behaviors under analogous perturbations.

Exercise

The RSVP framework classifies physical, cognitive, and social systems by their accessibility landscapes. Give one example of each pair: (a) two physical systems with similar accessibility landscapes, (b) two cognitive systems with similar accessibility landscapes, (c) one physical and one cognitive system with similar accessibility landscapes. For each pair, identify a specific behavior predicted to be analogous.

Exercise

Propose a classification of mathematical proof strategies (induction, contradiction, construction, pigeonhole, probabilistic method, etc.) based on their constraint-space structure. What is the admissible region for each strategy? What accessibility landscape does each navigate?

47

Ontological Engineering

An ontology is not a description of reality.
It is a bet on which distinctions matter.
Good ontologies make accurate bets.
Bad ontologies lose them quietly.
— Flyxion, *Semantic Infrastructure*

Classification (Chapter 45) produces taxonomies. Ontological engineering goes further: it designs the category systems themselves, making explicit choices about which distinctions to encode, which to elide, and how categories relate to each other. This chapter develops the theory of ontological engineering using the semantic module framework.

Connects to semantic modules (Ch. 25) and obstruction theory (App. I)

47.1 Building Categories

Every ontology is a system of semantic modules (Chapter 25): each category is a module with a content (what entities belong to it), an admissibility structure (what properties make something a member), and an interface (how the category relates to other categories).

Definition 47.1: Ontological System

An *ontological system* is a tuple $(\mathcal{C}, \mathcal{R}, \mathcal{A})$ where:

- $\mathcal{C} = \{C_1, \dots, C_n\}$ is a set of categories (semantic modules),
- $\mathcal{R}$ is a set of relations between categories (is-a, part-of, caused-by, associated-with),
- $\mathcal{A}$ is the joint admissibility structure (which combinations of category membership are consistent).

47.2 Revising Categories

Ontologies must be revised as knowledge evolves. Revision is not merely adding new categories — it may require restructuring existing ones, splitting overloaded categories, merging categories that were wrongly distinguished, or changing the underlying relations.

Definition 47.2: Ontological Revision

An *ontological revision* is a morphism $r : \mathcal{O}_1 \to \mathcal{O}_2$ between ontological systems that: (1) is admissibility- preserving (valid combinations in $\mathcal{O}_1$ remain valid in $\mathcal{O}_2$), and (2) minimizes the disruption to existing knowledge (minimal semantic distance between corresponding categories).

The Copernican revision of astronomy is an ontological revision: the categories "fixed Earth" and "moving Sun" were replaced by "orbiting Earth" and "central Sun." The revision was valid (observational data remained consistent) and disruptive (the category structure changed fundamentally).

47.3 When Categories Fail and How to Fix Them

Ontological systems fail in predictable ways:

- **Over-splitting:** two categories that should be one ("heat" and "caloric" before thermodynamics unified them).
- **Under-splitting:** one category that should be two ("atom" before the discovery of the nucleus).
- **Wrong relations:** correct categories, wrong relationships ("evolution" before the mechanism of natural selection).
- **Missing categories:** the ontology lacks a category for an important class of phenomena ("quantum field" before quantum field theory).

Each failure type has a signature in the accessibility landscape: over-splitting creates unnecessary wells; under-splitting hides peaks; wrong relations produce incorrect gradient flows; missing categories leave entire regions of the landscape unnamed and inaccessible.

The Ontological Engineering Principle

A good ontology minimizes total constraint violation across the knowledge infrastructure it serves: it encodes the distinctions that matter (reducing κ for accurate prediction), ignores the distinctions that don't (reducing maintenance cost), and provides relations that support productive inference (maximizing $S_{\mathbf{Sem}}$).

Exercise

The ICD (International Classification of Diseases) is a medical ontology used globally for clinical and epidemiological purposes. Identify one case of over-splitting, one of under-splitting, and one of wrong relations in the current version. For each, propose a revision and analyze its accessibility consequences.

Exercise

Design a minimal ontology for the concept of "intelligence." Your ontology should: (1) encompass biological and artificial intelligence, (2) encode the key distinctions (general vs. narrow, adaptive vs. fixed), and (3) be revision-friendly. What categories and relations does it include? What potential failure modes does it have?

48

The Sociology of Knowledge

Knowledge does not exist in minds alone.
It exists in the spaces between minds —
in institutions, in conversations,
in arguments that outlast the arguers.
— Flyxion, *Semantic Infrastructure*

Chapter 46 developed ontological engineering as a design discipline. This chapter examines the social and institutional context in which knowledge is produced, organized, and transmitted — the sociology of knowledge.

Connects to civilizational dynamics (App. O) and xyloarchy (Ch. 26)

48.1 Scientific Institutions as Knowledge Infrastructure

Scientific institutions — universities, journals, funding agencies, professional societies — are knowledge infrastructure in the sense of Chapter 25. They implement the five knowledge evolution operations (extension, correction, composition, abstraction, instantiation) at the collective level.

Definition 48.1: Scientific Institution as Semantic Module

A *scientific institution* functions as a semantic module $(C_{\text{inst}}, A_{\text{inst}}, \partial C_{\text{inst}})$ where:

- C_{inst} is the body of knowledge the institution maintains (its curricula, standards, archives),
- A_{inst} is its methodological standards (what counts as valid evidence, what counts as a valid argument),
- ∂C_{inst} is its interface with other institutions and with the public.

48.2 Classification Systems as Social Technologies

Classification systems are not merely cognitive tools — they are social technologies that coordinate action across communities. The Linnaean taxonomy coordinates biological

research globally. The Dewey Decimal System coordinates library organization. The periodic table coordinates chemistry.

Each system embeds choices — which distinctions to draw, which to ignore — that reflect the social priorities of the community that created it. These choices are often invisible to later users who experience the classification as "natural."

48.3 Educational Structures as Accessibility Engineering

Educational systems are the primary mechanism by which civilizations transmit their accumulated constraint modifications to new generations. But they do more than transmit: they shape the accessibility landscape of the next generation's knowledge infrastructure.

Definition 48.2: Curriculum as Accessibility Engineering

A *curriculum* is an accessibility engineering plan: a sequence of constraint modifications $(\Delta\mathcal{C}_1, \Delta\mathcal{C}_2, \dots, \Delta\mathcal{C}_n)$ designed to build a knowledge infrastructure with target accessibility properties. A curriculum is *good* if it maximizes the accessibility entropy of the resulting infrastructure.

48.4 Cultural Memory

Cultural memory is the subset of civilizational memory (Chapter 23) that is encoded in symbolic form and transmitted through cultural practices rather than biological inheritance. It includes: stories, rituals, arts, legal codes, scientific traditions, and technical know-how.

Cultural memory is more fragile than biological memory (which is redundantly encoded in millions of individuals) but more flexible (it can encode arbitrary constraint modifications, not just those relevant to survival and reproduction).

The Cultural Memory Theorem

The accessibility entropy of a civilization's knowledge base is bounded above by the quality of its cultural memory mechanisms:

$$S_{\text{civ}} \leq f(\text{transmission fidelity}, \text{storage redundancy}, \text{retrieval efficiency}).$$

Civilizations with high-fidelity, redundant, efficient cultural memory can accumulate more knowledge across generations than those with low-fidelity, fragile, or inefficient memory.

Exercise

Compare the cultural memory mechanisms of ancient oral traditions (Homeric poetry, Vedic recitation) and modern digital archives. For each mechanism, estimate transmission fidelity, storage redundancy, and retrieval efficiency. Which is more robust to catastrophe? Which supports more rapid knowledge evolution?

Exercise

The peer review system in science functions as a correction mechanism in the knowledge infrastructure. Analyze its performance using the REPL framework of Chapter 39. What is the loop latency? What is the feedback accuracy? What are the systematic biases? How would you redesign it to improve learning efficiency while maintaining accuracy?

Part XIV

Civilization as Computation

49

Collective Memory

Libraries are not storage.
They are metabolic organs:
they process, transform, and regenerate
the civilization's knowledge.
— Flyxion, *Semantic Infrastructure*

Part XIV, the final part of the monograph, begins here. This chapter examines collective memory — the mechanisms by which civilizations store and retrieve accumulated constraint modifications — as the foundation for all the chapters that follow.

Connects to App. O on civilizational dynamics and Ch. 23 memory chains

49.1 Libraries

A library is a physical instantiation of part of the civilizational memory chain. It stores encoded constraint modifications (books, manuscripts, digital records) and provides mechanisms for retrieving and applying them.

Definition 49.1: Library as Semantic Infrastructure

A *library* is a semantic infrastructure $(\mathcal{M}, \mathcal{I}, \mathcal{R}, \mathcal{U})$ where:

- $\mathcal{M}$ is the collection (encoded constraint modifications),
- $\mathcal{I}$ is the index (retrieval structure),
- $\mathcal{R}$ is the reference system (links between items),
- $\mathcal{U}$ is the update mechanism (acquisitions, withdrawals, corrections).

Its quality is measured by the accessibility entropy it provides to its users: $S_{\text{lib}} = \log |\text{retrievable items relevant to current query}|$.

The destruction of libraries — Alexandria, Baghdad, the Maya codices — represents irreversible constraint loss: modifications that could have been applied to future knowledge infrastructure, removed from the civilizational memory chain.

49.2 Archives

Archives differ from libraries in their primary function: where libraries support active knowledge use, archives support historical reconstruction. The archive preserves the *history* of constraint modifications, not just their current state — the version history of the civilizational knowledge infrastructure.

Definition 49.2: Archive as Version History

An *archive* is a versioned semantic infrastructure that records not just current constraint modifications but the sequence of modifications that produced them. It supports reconstruction of past knowledge states: given the archive up to time t_0, reconstruct the constraint set $\mathcal{C}(t_0)$.

49.3 The Internet as Collective Memory

The Internet is the most extensive collective memory system in human history. It stores an enormous fraction of currently-produced text, image, audio, and video, and makes it available with low retrieval latency globally.

But the Internet is a poor archive: content disappears (link rot), context is lost (pages update without versioning), and quality filtering is minimal (high-quality and low-quality content are stored with equal fidelity). It is better described as a collective working memory than a collective long-term memory.

49.4 Civilizational Recall

Definition 49.3: Civilizational Recall

A civilization's *recall capacity* is the probability that a constraint modification stored at time t_0 can be retrieved and applied at time $t_1 > t_0$:

$$\text{Recall}(t_0, t_1) = P(\mathcal{C}(t_1) \ni c \mid c \in \mathcal{C}(t_0))$$

This depends on transmission fidelity, storage redundancy, retrieval efficiency, and the interval $t_1 - t_0$.

High civilizational recall requires redundant storage (multiple copies), high-fidelity transmission (accurate copying), efficient indexing (fast retrieval), and active maintenance (preventing decay).

The Collective Memory Accessibility Principle

A civilization's accessible future is bounded by its collective memory: the constraints it can draw on to navigate future challenges are limited to those stored in accessible, retrievable form. Civilizational accessibility entropy is proportional to collective memory quality.

Exercise

The Internet Archive (archive.org) preserves web pages but faces challenges: storage costs, copyright disputes, content selection. Using the collective memory framework, design a principled selection policy for a universal digital archive with limited storage. What should be preserved and what should be allowed to decay?

Exercise

Indigenous oral traditions have preserved ecological knowledge (plant properties, weather patterns, migration routes) over thousands of years with high fidelity. Analyze the mechanisms that achieve this fidelity. What does modern information infrastructure lack that oral traditions possess? What does it possess that oral traditions lack?

50

Educational Architecture

A school is not a building.
It is an accessibility engineering project
whose blueprint is the curriculum
and whose construction material is attention.
— Flyxion, *Semantic Infrastructure*

Chapter 47 introduced curriculum as accessibility engineering. This chapter develops the architectural principles for building educational systems that maximize the accessibility entropy of their graduates' knowledge infrastructure.

Connects to App. N on learning geometry and curriculum dynamics

50.1 Learning Environments

The physical and social environment of learning affects the accessibility landscape in concrete ways. A learning environment is optimal when it:

- Minimizes distractions (reduces $\kappa_{\text{attention}}$),
- Maximizes feedback quality (increases REPL accuracy),
- Provides access to relevant cognitive prosthetics (increases $S_{\text{prosthetic}}$),
- Enables social knowledge construction (homotopy merges between learners' knowledge infrastructures).

Definition 50.1: Optimal Learning Environment

A *learning environment* $\mathcal{L}$ is *optimal* for learner set $\{A_1, \dots, A_n\}$ with target knowledge infrastructure $\mathcal{C}^*$ if it maximizes:

$$\mathbb{E}\left[\min_i d(\mathcal{C}_i(T), \mathcal{C}^*)\right]$$

— the expected minimum distance between each learner's achieved knowledge

infrastructure and the target, after learning time T.

50.2 Curricula

Conceptual Aside: The Tower of Babel as Structural Failure: The Decelerationist Agenda

The Tower of Babel is conventionally read as a story about divine punishment for human hubris. Read structurally — as an engineer analyzing a collapsed bridge — it reveals something more precise: a *failure of excessive coherence*.

When a civilization over-optimizes for universal interoperability — one language, one project, one parser — it achieves maximum efficiency at the cost of maximum fragility. A single blind spot becomes a single point of failure. The monoculture of cognition collapses the same way a monoculture of crops collapses: quickly, catastrophically, and for the same underlying reason.

The RSVP response is *entropy injection*: deliberately cultivating cognitive biodiversity to prevent civilizational-scale cohomological failure. This is formalized in the following combinatorial structure:

$$N_{\text{archetypes}} = 7 \times 3 \times 10 \times 5 \times 4 = 4{,}200$$

where the factors represent:

- **7** subject orientations (geometry, algebra, trigonometry, calculus, statistics, stoichiometry, logic — the seven schools of Chapter VIII),
- **3** communication modalities (spoken, mute/signed, mixed),
- **10** language families (different linguistic structure = different cognitive parser),
- **5** programming paradigms (imperative, functional, logic, object-oriented, array/relational),
- **4** mathematical notations (standard, category-theoretic, diagrammatic, computational).

The $4{,}200$ school archetypes are not $4{,}200$ ways to teach the same content. They are $4{,}200$ distinct ways to format a human cognitive architecture. The primary output of this educational system is not graduates who know mathematics or biology — it is *translators*: people who can move between radically different symbol systems without mistaking any one of them for reality itself.

The ontogenetic parade of parsers (Chapter 35) explains why this matters: every new parser unlocks a new failure mode. A society of translators distributes its failure modes across $4{,}200$ incompatible architectures, ensuring that no single

blind spot can bring the whole structure down.

The curriculum is the sequence of constraint modifications that a learner is guided through. Its design is the central problem of educational architecture.

The curriculum should be:

- **Prerequisite-respecting:** later concepts must be accessible given earlier ones.
- **Exploration-balanced:** sufficient novelty to maintain engagement, sufficient consolidation to build robust structures.
- **Transfer-promoting:** concepts introduced in one domain should be recognizable (via structural analogy) when encountered in others.
- **Accessibility-maximizing:** the final knowledge infrastructure should have high S_K — many directions in which the learner can grow independently.

50.3 Constraint-Guided Teaching

Traditional teaching is transmission: the teacher has knowledge that the student lacks, and teaching transfers it. Constraint-guided teaching is different: the teacher does not transmit content but *designs constraints* that guide the student's own exploration toward productive regions of the knowledge landscape.

Definition 50.2: Constraint-Guided Teaching

Constraint-guided teaching designs the constraint space of learning activities so that the student's accessibility gradient flow converges naturally to the target knowledge infrastructure, without explicit instruction in every detail.

Socratic questioning is constraint-guided teaching: the teacher imposes consistency constraints ("but doesn't that contradict what you said earlier?") that drive the student's reasoning toward coherent understanding.

The Educational Architecture Principle

The purpose of educational architecture is not information transfer but accessibility engineering: building in each learner an infrastructure with the maximum possible accessibility entropy, so that they can continue learning independently after formal education ends. A school that produces graduates who can only apply what they were taught has failed; a school that produces graduates who can learn anything

they need has succeeded.

Exercise

Design a curriculum for teaching the content of this monograph to undergraduate students with no prior exposure to category theory, field theory, or gesture studies. What prerequisites are needed? What is the optimal ordering of the 14 parts? What cognitive prosthetics should students use?

Exercise

The Montessori method, the Reggio Emilia approach, and traditional direct instruction represent different educational architectures. Analyze each using the constraint-guided teaching framework. What constraint structures does each implement? What learner profiles is each optimal for?

51

Knowledge Ecosystems

A healthy knowledge ecosystem has predators.
Without critics, ideas grow unchecked.
Without competition, paradigms calcify.
Without extinction, dead ideas crowd out living ones.
— Flyxion, *Semantic Infrastructure*

Chapter 48 examined collective memory; Chapter 49 examined educational architecture. This chapter examines the third pillar of civilizational knowledge: the *knowledge ecosystem* — the community of researchers, institutions, and ideas that collectively produce, validate, and distribute new knowledge.

Connects to xyloarchy (Ch. 26) and constraint ecology (Ch. 26); App. O

51.1 Researchers

Individual researchers are knowledge infrastructure nodes: they process existing knowledge, generate novel constraint modifications (new results), and connect previously separate regions of the knowledge landscape.

Definition 51.1: Researcher as Knowledge Node

A *researcher* r in a knowledge ecosystem is characterized by:

- Their *knowledge infrastructure* $\mathcal{C}_r$ (what they know),
- Their *production function* $f_r : \mathcal{C}_r \to \Delta\mathcal{C}$ (what new constraints they generate),
- Their *connectivity* $N(r)$ (which other researchers they regularly exchange knowledge with).

A researcher's value to the ecosystem is proportional to the accessibility entropy they add: $\Delta S_{\text{eco}}(r)$.

51.2 Institutions

Institutions coordinate researcher activity: they provide resources, establish standards, and maintain the collective knowledge infrastructure. But institutions also impose constraints that can reduce accessibility: disciplinary boundaries, methodological orthodoxy, and funding biases toward established approaches.

The optimal institution balances two competing objectives:

- **Quality assurance:** ensuring that constraint modifications entering the knowledge infrastructure are accurate (reducing κ_{error}).
- **Accessibility expansion:** allowing novel, speculative, interdisciplinary work that expands S_{eco} even before its accuracy is fully established.

51.3 Information Flow

Knowledge ecosystems are networks: researchers and institutions are nodes, and information flows along edges (citations, conversations, collaborations, publications). The topology of this network determines how quickly new constraint modifications propagate through the ecosystem.

Definition 51.2: Knowledge Flow Network

The *knowledge flow network* of a research community is a directed weighted graph $G = (V, E, w)$ where:

- V is the set of researchers and institutions,
- $(v_1, v_2) \in E$ if v_1 regularly transmits knowledge to v_2,
- $w(v_1, v_2)$ is the transmission rate (how frequently and how much knowledge flows along this edge).

The network's accessibility is the spectral gap of its Laplacian: how quickly information diffuses from any node to any other.

51.4 Ecological Health Metrics

A healthy knowledge ecosystem has:

- **Diversity:** multiple competing approaches to each problem.
- **Predation:** active criticism that eliminates inaccurate constraint modifications.
- **Succession:** old paradigms replaced by better ones without catastrophic loss of accumulated knowledge.

- **Resilience:** capacity to recover from catastrophic disruptions (loss of key researchers, funding cuts, institutional collapse).

The Knowledge Ecosystem Health Principle

A knowledge ecosystem is healthy to the degree that it maximizes the rate of accessible-constraint-modification generation per unit resource consumed, subject to maintaining accuracy and resilience. Unhealthy ecosystems either produce too slowly (over-conservative, over-critical) or too inaccurately (under-critical, under-constrained).

Exercise

Model the relationship between disciplinary specialization and interdisciplinary synthesis in a knowledge ecosystem. If researchers specialize more, quality increases but connectivity decreases. If they generalize more, connectivity increases but quality decreases. What is the optimal balance? Does the answer depend on the maturity of the field?

Exercise

The Medici family's patronage of Renaissance art and science is often cited as a knowledge ecosystem intervention. Analyze their patronage as a knowledge ecosystem design: what nodes did they fund? What edges did they create? What was the effect on the accessibility landscape of 15th-century European knowledge?

52

Toward a Semantic Civilization

Every chapter of this book
was written by the same process
that built the civilization that made it possible:
constraint, projection, collapse, and the
slow accumulation of accessibility.
— Flyxion, *Semantic Infrastructure*

Synthesis of the entire monograph; connects to all appendices

This final chapter draws together the threads of the monograph and looks forward. We have traveled from the primitive operations of containment and collapse (Part I) through the calculus of evaluation (Part II), the theory of gesture (Part III), the geometry of constraint (Part IV), the physics of accessibility (Part V), the mechanics of mind (Part VI), the engineering of knowledge (Part VII), the geometry of logic (Part VIII), the evolution of symbols (Part IX), the navigation of knowledge (Part X), the architecture of learning (Part XI), the construction of simulated worlds (Part XII), the theory of classification (Part XIII), and the foundations of civilizational knowledge (Part XIV).

What have we found?

52.1 Meaning-Centered Infrastructure

The central claim of this monograph can be stated simply:

The fundamental function of intelligence, education, science, infrastructure, and civilization is the preservation and expansion of coherent future accessibility.

Constraint → Projection → Meaning → Knowledge → Civilization → Accessibilit

At every scale — from the pop of a Spherepop bubble to the relaxation of a cosmological field, from the motor trajectory of a written letter to the semantic module of a scien-

tific theory, from the chain of an individual's memory to the collective memory of a civilization — the same structure appears.

Persistent systems are accessibility-preserving systems.

52.2 Constraint-Aware Systems

A semantic civilization is one that has made this principle explicit — that designs its institutions, curricula, archives, and knowledge infrastructure with accessibility as the explicit objective function.

Definition 52.1: Semantic Civilization

A *semantic civilization* is a civilization that:

1. Maintains a semantic infrastructure **Sem** for its accumulated knowledge, with explicit version history and obstruction detection,
2. Designs its educational systems as accessibility engineering projects, maximizing S_K for graduates,
3. Measures the health of its knowledge ecosystem by S_{eco},
4. Deploys Yarncrawler-like systems for continuous semantic infrastructure maintenance,
5. Treats collective memory as a strategic resource requiring active management.

52.3 Human–AI Collaboration

The Unified Picture: From Quantum Event to Civilization

The framework developed across this monograph achieves its fullest expression when the scales are seen together:

Scale	Primary object	RSVP role
Quantum event	Pop (irreversible click)	Commitment: Γ_t grows
Particle physics	Positive geometry	Residue of irreversibility
Cosmological field	$(\Phi, \mathbf{v}, S)$ plenum	Constraint relaxation
Cognitive manifold	Semantic trajectory	Accessibility navigation
Memory	Standing wave residue	Memoized traversal
Language	Shared resonance	Civilizational shortcut
Institution	Semantic module	Constraint-preserving memory
Civilization	Distributed accessibility	$S_{\text{civ}} = \log \lvert \mathcal{A}_C \rvert$

At every scale, the same three-field structure governs dynamics: a *landscape* (Φ) of differential accessibility, a *flow* ($\mathbf{v}$) of organized transport, and an *entropy* (S) that measures future trajectory volume. The universe does not expand into a void; it relaxes from a high-constraint saddle. Thoughts do not retrieve files; they broadcast resonances. Civilizations do not accumulate facts; they memoize constraint traversals.
The deep-dive formulation: *You are not a static object sitting behind your eyes. You are the most persistent, most beautifully complex stabilized trajectory in your own internal universe — continuously navigating, continuously committing, continuously leaving residues for the trajectories that will follow.*

The framework developed in this monograph has specific implications for the emerging relationship between human and artificial intelligence.

AI systems that operate as sophisticated classifiers — mapping inputs to outputs through learned patterns — operate at the Σ^* level: they have access to projected symbols but not to the richer gesture and constraint structures from which symbols derive. The Gesture Before Symbol thesis (Chapters 10–13) implies that such systems are systematically incomplete in specific ways: they lack access to the sub-symbolic structure that gives symbols their meaning.

The IAD framework (Chapter 22) points toward a more productive architecture: AI systems that function as Yarncrawlers in the knowledge ecosystem, maintaining and extending the semantic infrastructure rather than replacing human judgment. The trust weight $\alpha(x)$ governs when the AI defers to human expertise and when it operates independently — a formalization of the collaborative relationship.

52.4 Future Directions

The framework of this monograph is incomplete in several ways that suggest directions for future work:

1. **Quantitative RSVP cosmology:** the RSVP field equations need to be solved for specific cosmological models and compared quantitatively to observational data. The qualitative framework of Chapters 18–21 requires a quantitative instantiation.
2. **Computational gesture theory:** the gesture manifold framework of Chapter 11 and Appendix F needs implementation in real motor-learning systems. The canonical gesture and fiber structure need to be measured empirically for specific motor domains.
3. **Formal semantic infrastructure:** the categorical framework of Chapter 25 and Appendix M needs implementation as a practical knowledge management system. The

homotopy merge operation needs computational realization.

4. **Educational experiments:** the curriculum accessibility framework of Appendices N and O makes specific predictions about which educational sequences maximize accessibility entropy. These predictions are empirically testable.
5. **Lean 4 proofs:** the mathematical claims in the appendices — particularly the Spherepop confluence theorem (Appendix C), the Boolean lattice theorem (Appendix D), and the accessibility field theorems (Appendix J) — should be formally verified in a proof assistant.

52.5 The Last Collapse

We began with the most primitive operation: the pop. A nested structure collapses to a simpler one. Complexity reduces to something more essential.

This monograph has been, in one sense, an extended argument that the pop is universal — that all of physics, cognition, computation, and civilization can be understood as successive collapses of nested constraint structures toward their accessible essentials.

But the pop is not destruction. The collapsed value carries everything that mattered in the original nested structure. The number 13 carries everything that mattered in $1 + 3 \times 2^2$ — the relationship between the parts, compressed into a single accessible form.

A semantic civilization is a civilization that has learned to pop well: to collapse its constraint structures toward their essentials while preserving everything that matters, to maintain the accessibility of what it has learned, and to keep its futures open.

The Final Theorem

There is no final theorem.
The structure of accessibility landscapes is that they have no maximal element: every accessible state has accessible continuations. Every Spherepop diagram has a larger one that contains it. Every theory has open problems at its boundary. Every civilization has uncharted territory at its frontier.
The constraint:

Constraint → Projection → Meaning → Knowledge → Civilization → Accessibility

does not terminate.
It recursively generates the next question from the answer to the last one.
This is the structure of an open future. It is the structure of a mind. It is the

structure of a civilization worth building.

Sets, Relations, and Constraint Spaces

A.1 Introduction

Many structures developed throughout this monograph share a common pattern. One begins with a large space of possibilities, imposes constraints, identifies equivalent configurations, and studies the resulting admissible structures. Whether one is discussing logical operators, gesture recognition, keyboard motion, semantic inference, cosmological trajectories, or nested Spherepop expressions, the same mathematical architecture repeatedly appears.

The purpose of this appendix is to formalize that architecture.

Central thesis. Structure is not fundamental. Constraint is fundamental. Objects emerge as stable equivalence classes within constrained spaces.

A.2 Constraint Spaces

Definition .2: Constraint Space

A *constraint space* is a triple $\mathcal{C} = (X, A, \kappa)$ consisting of:

- a *state space* X,
- an *admissible subset* $A \subseteq X$,
- a *constraint functional* $\kappa : X \to \mathbb{R}_{\geq 0}$

such that $A = \kappa^{-1}(0)$. States with $\kappa(x) = 0$ satisfy all constraints; states with $\kappa(x) > 0$ violate one or more constraints.

Example

Arithmetic expressions. Let $X = \{1{+}2,\ (1{+}2),\ (3),\ 3,\ ((3))\}$. Define $\kappa(x)$ as the number of unevaluated arithmetic operations. Then $\kappa(1{+}2) = 1$ while $\kappa(3) = 0$. The admissible set consists precisely of fully reduced expressions.

Example

Unit circle. Let $X = \mathbb{R}^2$ and $\kappa(x, y) = |x^2 + y^2 - 1|$. Then $A = \{(x, y) \in \mathbb{R}^2 : x^2 + y^2 = 1\}$.

A.3 Constraint Descent

Definition .3: Constraint Descent Flow

A *constraint descent flow* is a dynamical system

$$\frac{dx}{dt} = -\nabla\kappa(x).$$

Proposition .1: Monotone Descent

Along a constraint descent flow, $\kappa(x(t))$ is nonincreasing.

Proof. Differentiate: $\frac{d}{dt}\kappa(x(t)) = \nabla\kappa \cdot \frac{dx}{dt}$. Substituting $\frac{dx}{dt} = -\nabla\kappa$ gives $\frac{d}{dt}\kappa = -\|\nabla\kappa\|^2 \leq 0$. ■

Conceptual Aside: Constraint Descent as a Unifying Principle

This result appears throughout the monograph in many guises: logical reduction, Spherepop evaluation, semantic refinement, RSVP relaxation, optimization, and learning. All are instances of constraint descent in appropriately defined spaces.

A.4 Equivalence Relations

Definition .4: Equivalence Relation

An *equivalence relation* $\sim$ on X satisfies reflexivity ($x \sim x$), symmetry ($x \sim y \Rightarrow y \sim x$), and transitivity ($x \sim y$, $y \sim z \Rightarrow x \sim z$).

Example

Arithmetic evaluation induces $((3)) \sim (3) \sim 3$. All denote the same value.

Example

In gesture recognition, two hand trajectories may differ microscopically while producing the same letter: $g_1 \sim g_2$ whenever they correspond to the same recognized symbol.

A.5 Quotient Spaces

Definition .5: Quotient Space

The *quotient space* is $X/\sim = \{[x] : x \in X\}$ where $[x] = \{y : y \sim x\}$.

This is the mathematical foundation of symbolic compression, gesture canonicalization, semantic normalization, and Spherepop collapse operators.

Proposition .2: Quotient Projection is Surjective

The quotient projection $\pi : X \to X/\sim$ defined by $\pi(x) = [x]$ is surjective.

Proof. For any $[a] \in X/\sim$, choosing $x = a$ gives $\pi(a) = [a]$. ■

A.7 Objects as Equivalence Classes

Theorem .1: Symbolic Representation Theorem

Every symbolic system can be represented as an equivalence class within a richer state space.

Proof. Let S be a symbolic system. Construct a state space X consisting of all possible realizations of symbols. Define $x \sim y$ iff x and y represent the same symbol. Then equivalence classes $[x]$ correspond exactly to symbolic objects, giving $S \cong X/\sim$. ■

> ⋆ **Remark**
>
> The letter "A" is not the ink. It is the equivalence class of all acceptable realizations. A gesture is not a trajectory. It is the equivalence class of trajectories recognized as equivalent.

A.8 The Constraint–Quotient Principle

Constraint–Quotient Principle

Structure emerges from the interaction of (1) a possibility space X, (2) constraints κ, (3) equivalence relations $\sim$, and (4) projections π. The resulting object is $(X, \kappa, \sim, \pi)$. Everything in this monograph may be viewed as a particular realization of this architecture:

$$\text{Constraint} \;\to\; \text{Equivalence} \;\to\; \text{Projection} \;\to\; \text{Structure}.$$

Appendix B will show how projection necessarily creates information loss. *Appendix C* will show that Spherepop evaluation is a constraint-descent process on expression trees.

Projection Theory and Information Loss

B.1 Introduction

The previous appendix established that symbolic systems emerge through equivalence relations and quotient constructions. We now study the geometry of projection itself.

Central claim. Every useful representation is necessarily many-to-one. A representation that loses nothing is not a representation at all.

B.2 Projections

Definition .6: Projection

Let X and M be sets. A *projection* is a function $\pi : X \to M$. The space X is the *source space*; M is the *representation space*.

Example

A camera image projects $\mathbb{R}^3 \to \mathbb{R}^2$. Typing projects $G \to \Sigma$, where G is finger-trajectory space and Σ is the alphabet. Logical evaluation projects Formulae $\to \{T, F\}$.

Definition .7: Fiber

Given $m \in M$, the *fiber over* m is $F_m = \pi^{-1}(m) = \{x \in X : \pi(x) = m\}$.

Example

For $\pi(x, y) = x$, the fiber over $m = 3$ is the entire vertical line $F_3 = \{(3, y) : y \in \mathbb{R}\}$. The representation remembers only $x = 3$; everything else is forgotten.

B.4 The Information Loss Theorem

Theorem .2: Information Loss

If $|X| > |M|$, then every surjective projection $\pi : X \to M$ loses information.

Proof. Suppose not. Then every point in M would correspond to exactly one point in X, making π injective. An injective surjection satisfies $|X| = |M|$, contradicting $|X| > |M|$. ■

Warning

Compression is not an implementation detail. It is mathematically unavoidable. Any projection from a richer space to a poorer one necessarily discards information.

B.5 Representation Entropy

Definition .8: Representation Entropy

The *representation entropy* of $m \in M$ is $S(m) = \log |F_m|$. Large fibers correspond to large uncertainty; small fibers to precise representations.

Example

Suppose 1000 different gestures produce the letter "A". Then $S(\mathtt{A}) = \log(1000)$. The representation "A" contains less information than the original motion.

B.6 Projection Chains

Definition .9: Projection Chain

A *projection chain* is $X \to M_1 \to M_2 \to \cdots \to M_n$.

A canonical example:

$$\text{trajectory} \to \text{gesture} \to \text{letter} \to \text{word} \to \text{sentence} \to \text{semantic category.}$$

Theorem .3: Entropy Monotonicity

Entropy cannot decrease along a projection chain.

Proof. Fibers can only grow under composition of projections. If $\pi_2 \circ \pi_1$ is a composition, each final state inherits all ambiguity from previous stages plus additional ambiguity introduced later. Therefore $S_{n+1} \geq S_n$. ■

B.7 The Surjective Hypercube

Definition .10: Surjective Hypercube

Let $Q_n = \{0,1\}^n$. A *surjective hypercube* is a pair (Q_n, π) where $\pi : Q_n \to Y$ is surjective.

Example

Let $\pi(x_1, x_2, x_3, x_4) = (x_1, x_2)$. Then 16 states collapse to 4 states, each with 4 preimages: $Q_4 \to Q_2$.

B.8 Hypercube Splitting

Definition .11: Splitting Function

A *splitting function* is $\sigma : Q_n \to \{0,1\}$, partitioning the hypercube into $Q_n^+ = \sigma^{-1}(1)$ and $Q_n^- = \sigma^{-1}(0)$.

Every Boolean decision creates a hypercube split. The penteract (Appendix E) is a fibered pair (Q_n^-, Q_n^+, π) where the lower cube represents detailed states, the upper cube compressed states, and the connecting fibers encode admissible lifts.

B.12 The Fundamental Projection Principle

Theorem .4: Reality Partitioned by Representation

Every representation partitions reality into fibers.

Proof. Let $\pi : X \to M$. For every $m \in M$ define $F_m = \pi^{-1}(m)$. The collection $\{F_m\}$ forms a partition of X. ■

The Fiber Principle

A letter is a fiber. A word is a fiber. A gesture is a fiber. A concept is a fiber. A memory is a fiber. A scientific theory is a fiber. Every representation is a partition imposed upon a richer reality.

Appendix C will use this machinery to derive Spherepop evaluation as a constraint-reduction process on nested expression manifolds.

Spherepop Calculus

C.1 Introduction

The Spherepop formalism arose from a simple geometric observation. Ordinary symbolic notation represents hierarchy using brackets: $(1 - (3 \times 2^2))$. The brackets indicate evaluation order but possess no geometric interpretation. Spherepop replaces brackets by nested regions. Expressions become topological objects. Evaluation becomes the progressive collapse of nested constraint domains.

C.2 Expression Trees

Definition .12: Expression Tree

Let Σ be a set of symbols (constants, variables, operators). An *expression tree* is a rooted tree $T = (V, E)$ whose leaves contain constants or variables and whose internal nodes contain operators.

Proposition .3: Embedding Existence

Every finite expression tree admits a Spherepop embedding into nested closed regions.

Proof. Proceed recursively. Embed the root as a region; embed each child as a disjoint interior region; repeat until leaves. Finiteness ensures termination. ■

C.5 The Complexity Functional

Definition .13: Complexity Functional

Let E be an expression. Define $C(E)$ as the number of unresolved operator nodes.

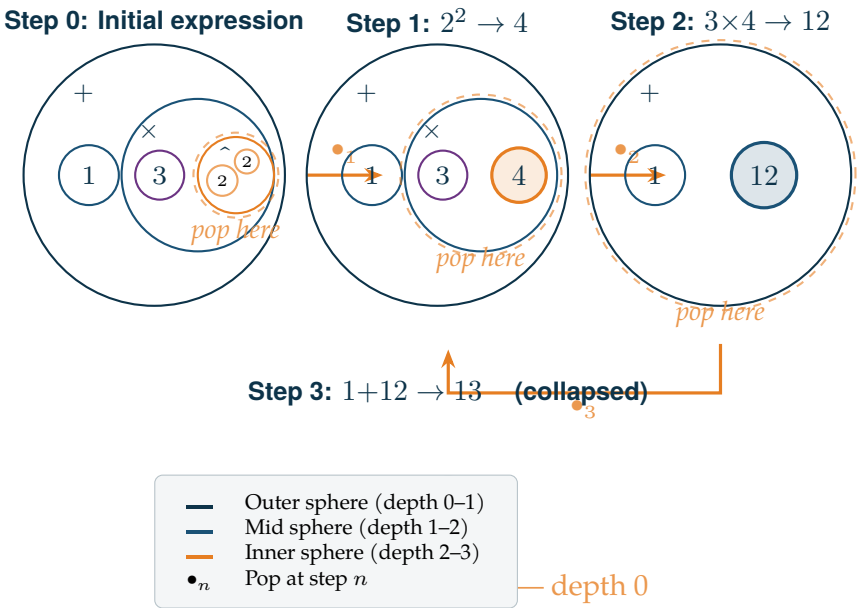

Figure 1. Spherepop evaluation of $1 + 3 \times 2^2$. Each step collapses an innermost sphere (nested region). The complexity functional $C(E)$ decreases monotonically: $3 \to 2 \to 1 \to 0$.

Proposition .4: Evaluation Decreases Complexity

Each evaluation step satisfies $C(E_{t+1}) = C(E_t) - 1$.

Definition .14: Pop Operator

The *pop operator* P maps an expression E to a reduced expression $P(E)$ by eliminating one evaluation domain:

$$P(2^2) = 4, \quad P(3 \times 4) = 12, \quad P(1 - 12) = -11.$$

C.9 Termination

Theorem .5: Spherepop Termination

Every finite arithmetic Spherepop expression terminates.

Proof. Each pop decreases $C(E)$ by one. Since $C(E) \geq 0$ and is integer-valued, only finitely many decreases are possible. ■

C.10 Confluence

Theorem .6: Spherepop Confluence

Spherepop arithmetic is confluent whenever operator precedence is respected.

Proof. Arithmetic evaluation defines a unique value. Every legal reduction sequence preserves semantic equivalence. Hence all legal paths terminate at the same value. ■

C.12 Spherepop as Constraint Descent

Define $\kappa(E) = C(E)$ — the number of unresolved operations. Every pop satisfies $\kappa(P(E)) < \kappa(E)$. Thus Spherepop evaluation is precisely a constraint descent process (Appendix A, Definition .3).

> ⋆ **Remark**
>
> This is the first major bridge between Spherepop and RSVP. Both are relaxation systems. Both reduce constraint violation. Both seek admissible configurations.

C.14 Evaluation as Renormalization

Definition .15: Renormalizing Pop

A *renormalizing pop* is $R : M_i \to M_{i-1}$, replacing detailed internal structure by an effective value. Example: (3×2^2) becomes 12. The internal structure disappears; only effective behavior remains. This resembles renormalization in statistical physics.

C.15 The Spherepop Fundamental Theorem

Theorem .7: Spherepop Fundamental Theorem

Every finite Spherepop expression defines a terminating constraint-descent flow whose terminal state is an equivalence-class representative in the quotient space of semantic evaluation.

Proof. Termination follows from Theorem .5. Constraint descent follows from Proposition .4. The quotient construction: define $E_1 \sim E_2$ iff $\mathrm{eval}(E_1) = \mathrm{eval}(E_2)$; the terminal value is a representative of $[E]$ in the quotient. ■

Appendix D will show that Boolean logic can be represented as a Spherepop system whose nested regions correspond to logical operators.

Boolean Lattices and Logical Geometry

D.1 Introduction

Boolean algebra is often introduced as a collection of operators: $\wedge, \vee, \neg, \rightarrow, \leftrightarrow$. This approach obscures the underlying geometry. Logical operators are not isolated symbols — they are points within a partially ordered space. The Hasse diagrams appearing throughout the monograph are projections of this deeper structure.

D.2–D.4 Truth Functions and Encoding

Definition .16: Boolean Function on Two Variables

A *Boolean function on two variables* is a map $f : \{0,1\}^2 \rightarrow \{0,1\}$. Since there are four input states and two outputs for each, there are $2^4 = 16$ distinct Boolean functions.

Each function is encoded by its output column over the four input states TT, TF, FT, FF. Thus the space of connectives is $\{0,1\}^4 = Q_4$.

Definition .17: Boolean Connective Space

The *Boolean connective space* is $Q_4 = \{0,1\}^4$, forming the vertex set of the four-dimensional hypercube.

D.5 Partial Order

Definition .18: Truth Inclusion Order

For Boolean functions f, g, define $f \leq g$ if $f(x) \leq g(x)$ for every input state x.

D.7 The Boolean Lattice Theorem

Theorem .8: Boolean Lattice

The space of two-variable Boolean functions forms a Boolean lattice.

Proof. $\{0,1\}^4 \cong \mathcal{P}(\{1,2,3,4\})$, with each output pattern corresponding uniquely to a subset of input states. The power set forms a Boolean lattice under inclusion. ■

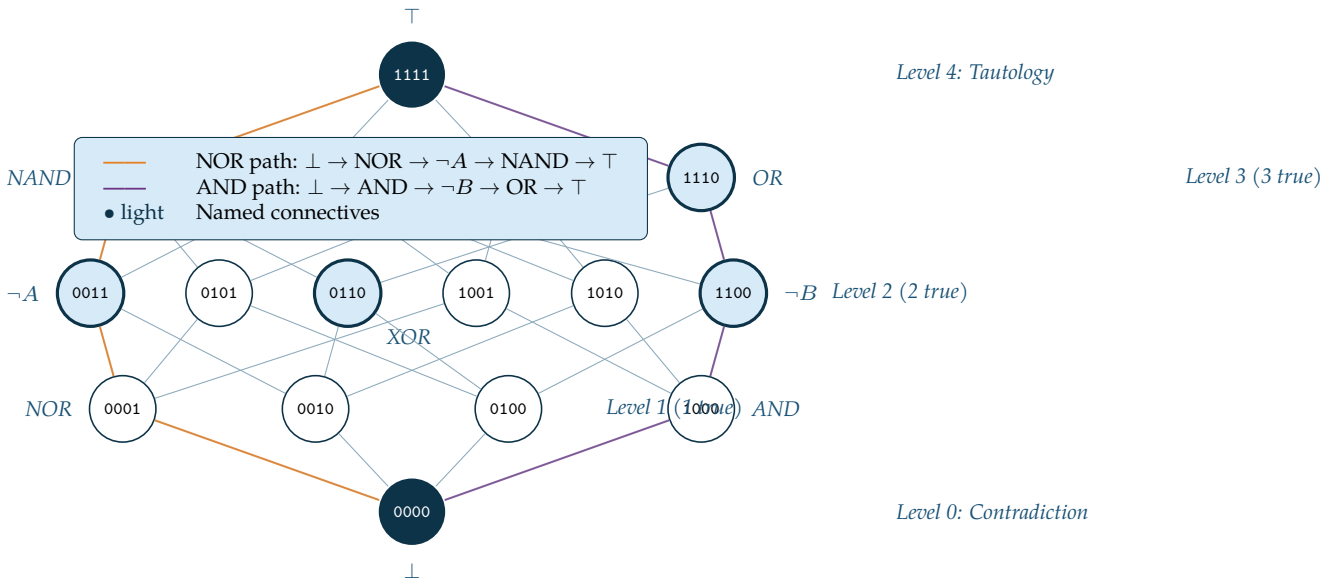

Figure 2. Hasse diagram of the 16 binary Boolean connectives. Nodes are labeled by their 4-bit output pattern. Highlighted paths trace two chains from $\bot$ (0000) to $\top$ (1111): the amber path through NOR $\to \neg A \to$ NAND, and the purple path through AND $\to \neg B \to$ OR.

D.8–D.9 Meet, Join, and Complementation

The lattice possesses meet $f \wedge g$ (intersection of truth sets), join $f \vee g$ (union of truth sets), and complement $\neg f$ with $(\neg f)(x) = 1 - f(x)$. Thus $\neg(0110) = 1001$, so XOR and XNOR are complements.

D.11 Logic as Geometry

Definition .19: Truth Region

For a Boolean function f, its *truth region* is $R_f = \{x : f(x) = 1\}$.

Contradiction $\cong$ empty region; tautology $\cong$ full space; implication $p \to q \cong$ containment $R_p \subseteq R_q$.

Definition .20: Logical Distance

The *logical distance* between f and g is $d(f, g) = \sum_i |f_i - g_i|$ (Hamming distance).

Theorem .9: Geometry–Logic Correspondence

Every finite Boolean algebra admits a geometric realization as a hypercube lattice.

Proof. A Boolean algebra on n generators is isomorphic to $\mathcal{P}(\{1, \dots, n\}) \cong \{0, 1\}^n = Q_n$. ■

The Logic-as-Geometry Principle

Logic is not merely symbolic manipulation. Logic is geometry in disguise. AND, OR, NAND, XOR, and their kin are not isolated symbols — they are vertices of a hypercube ordered by truth content.

Appendix E extends this geometric perspective to hypercubes in arbitrary dimension.

Hypercubes and Dimensional Aggregation

E.1 Introduction

The hypercube appears in Boolean logic, gesture spaces, accessibility landscapes, semantic manifolds, projection theory, curriculum structures, and combinatorial state spaces throughout this monograph. The central idea is simple: *every new independent binary distinction introduces a new dimension.*

Definition .21: n-Cube Recursion

$Q_1 = \{0, 1\}$ and $Q_{n+1} = Q_n \times \{0, 1\}$.

Theorem .10: Vertex Count

Q_n contains 2^n vertices.

Proof. Each of n coordinates has two values. ■

Theorem .11: Edge Count

Q_n contains $n \cdot 2^{n-1}$ edges.

Proof. Each vertex has n incident edges; divide by 2 to avoid double-counting. ■

Proposition .5: Diagonal Length

The longest diagonal of the unit n-cube has length $\sqrt{n}$.

Proof. Distance from $(0, \dots, 0)$ to $(1, \dots, 1)$ is $\sqrt{n}$. ■

Definition .22: Cubification

The *cubification operator* is $\mathcal{C}(X) = X \times \{0, 1\}$, giving $Q_n = \mathcal{C}^n(Q_0)$. This formalizes *lineify*, *squarify*, *cubify*, *tesseractify*.

Theorem .12: Canonical Splitting

Every n-cube decomposes into two $(n-1)$-cubes. An n-cube admits n independent coordinate splittings.

Proof. Partition by any coordinate $x_i \in \{0, 1\}$. ■

Definition .23: Surjective Hypercube

A pair (Q_n, π) where $\pi : Q_n \to Y$ is surjective. Multiple vertices project to the same represented state; their preimages form fibers encoding admissible lifts.

Theorem .13: Dimensional Aggregation

Every finite system of n independent binary distinctions has a natural representation as Q_n.

Proof. Each distinction contributes one coordinate; states are binary strings in $\{0, 1\}^n$. ■

The Hypercube Ubiquity Principle

Whenever a system is built from independent choices, constraints, propositions, classifications, or decisions, a hypercube lies beneath it.

Gesture Manifolds and Canonicalization

F.1 Introduction

The previous appendices studied states. Human action, however, is not fundamentally state-based — it is trajectory-based. A typed word is not a sequence of letters; it is a path through a space of possibilities. The central thesis is:

$$\text{Motor trajectory} \xrightarrow{C} \text{Canonical gesture} \xrightarrow{\Phi} \text{Symbol.}$$

Definition .24: Gesture Path Space

A *gesture* is a continuous path $g : [0, T] \to X$, where X encodes finger states, hand states, timing, pressure, and position. The *gesture space* is $G = \mathrm{Path}([0, T], X)$.

Definition .25: Gesture Manifold

A *gesture manifold* is a smooth submanifold $M \subseteq G$. Skill corresponds to confinement within specialized gesture manifolds.

Definition .26: Gesture Equivalence

$g_1 \sim g_2$ when they differ only by admissible perturbations (timing jitter, small spatial deformation, execution noise).

Definition .27: Canonicalization

A *canonicalization operator* is $C : G \to \hat{G}$ satisfying $C(g_1) = C(g_2)$ whenever $g_1 \sim g_2$. The *canonical gesture space* is $\hat{G} = G/\sim$.

Definition .28: Pivot

A *pivot* occurs at t_p when $\dot{g}(t_p^-) \cdot \dot{g}(t_p^+) < 0$ (velocity reverses sign). Pivots correspond to syllabic peaks, typing transitions, musical accents.

Definition .29: Gesture Energy

$E(g) = \int_0^T \|\dot{g}(t)\|^2 \, dt$. Motor learning tends toward lower-energy representatives within the same equivalence class.

Theorem .14: Gesture Geodesics

Among all equivalent motions, the geodesic (energy-minimizing) trajectory is most efficient. Repeated practice converges toward geodesic representatives.

Definition .30: Symbolic Projection

A *symbolic projection* is $\Phi : \hat{G} \to \Sigma$ assigning a symbol to each canonical gesture class.

Theorem .15: Gesture–Symbol Theorem

Symbols are projections of gesture equivalence classes, not primitives.

Proof. Canonicalization produces $[g]$; projection assigns $\Phi([g])$. Symbols arise from equivalence classes rather than individual trajectories. ■

The Gesture Substrate Principle

A symbol is not a primitive thing. It is a projection of a motor equivalence class. Symbolic systems operate in the image of Φ while discarding the richer fiber structure of $\hat{G}$.

Keyboard Geometry and Motor Fields

G.1 Introduction

Conventional computer science treats a keyboard as a discrete symbol emitter. The gesture framework suggests a different interpretation: *a keyboard is a geometric field through which hands navigate. Keys are landmarks. Words are trajectories. Typing is navigation.*

Definition .31: Keyboard Geometry

A *keyboard geometry* is an embedding $\iota : K \to \mathbb{R}^2$, where $K = \{k_1, \dots, k_n\}$ is the key set.

Definition .32: Finger Assignment and Domains

The *finger assignment map* is $F : K \to \{1, \dots, 8\}$. The *finger domain* of finger i is $D_i = F^{-1}(i)$, giving a partition $K = D_1 \cup \dots \cup D_8$.

Definition .33: Stretch Cost

$\sigma(k) = d(\iota(k), h(F(k)))$, where $h(F(k))$ is the home position of the responsible finger.

Definition .34: Keyboard Graph

$\Gamma = (K, E)$ where $(k_i, k_j) \in E$ whenever a finger may move directly between them. Typing is a path $\gamma \subseteq \Gamma$.

Definition .35: Words as Paths

A word $w = k_1 k_2 \cdots k_n$ defines a path $\gamma_w = (k_1, k_2, \dots, k_n)$ through Γ.

Definition .36: Motor Energy of a Word

$E(w) = \sum_i d(k_i, k_{i+1})^2$. A *geodesic word* minimizes energy among equivalent spellings.

Definition .37: Hand Alternation

With $H(k) \in \{L, R\}$, the *alternation count* is $A(w) = \sum_i \mathbf{1}[H(k_i) \neq H(k_{i+1})]$. High alternation generally increases typing speed.

Definition .38: Overlap Field

With $a_i(t)$ denoting key activation, $O(t) = \sum_{i<j} a_i(t)a_j(t)$. This recovers chord-like information discarded by text systems.

Definition .39: Keyboard Field

The *keyboard field* is $\mathcal{K} = (K, \Gamma, \sigma, H, F)$ — a fully structured geometric object, not merely a symbol table.

Theorem .16: Keyboard Navigation Theorem

Every typed text corresponds to a path through a constrained motor graph.

Proof. Each symbol corresponds to a key (vertex of Γ); successive symbols define successive vertices; text determines a path. ■

Symbol Emergence in Keyboard Systems

The traditional view: key $\to$ symbol. The geometric view: trajectory $\to$ gesture $\to$ symbol. Words are not strings. They are routes. Typing is not symbol production. It is constrained navigation through a motor field.

Admissibility and Constraint Closure

H.1 Introduction

Projection alone generates possibilities. A second structure is required to evaluate them. This structure is called *admissibility*.

Projection answers: *What can be produced?*
Admissibility answers: *What should be accepted?*

Definition .40: Admissibility Functional

An *admissibility functional* is a map $A : X \to \mathbb{R}$. Large values indicate coherence; small values indicate violation. The *admissible region* at threshold τ is $\mathcal{A}_\tau = \{x : A(x) \geq \tau\}$.

Example

With constraint violation κ, set $A(x) = e^{-\kappa(x)}$. Then $\kappa = 0 \Rightarrow A = 1$; large violations imply $A \to 0$.

Definition .41: Local and Global Constraints

A *local constraint* depends only on a neighborhood: $\kappa_L(x)$. A *global constraint* depends on an entire trajectory: $\kappa_G(\gamma)$. Admissibility typically combines both: $A = A_L \cdot A_G$.

Definition .42: Closure Operator

A *closure operator* is $\mathrm{Cl} : \mathcal{P}(X) \to \mathcal{P}(X)$ satisfying extensivity, idempotence, and monotonicity. Closure adds whatever structure is required for coherence.

Definition .43: Obstruction

An *obstruction* is a quantity $\epsilon(x)$ measuring failure of closure (missing assumptions, contradictions, broken references). $A(x) = f(\epsilon(x))$; large obstructions imply low admissibility.

Definition .44: Trajectory Admissibility

For $\gamma : [0, T] \to X$, define $A(\gamma) = \int_0^T a(\gamma(t))\, dt$.

Definition .45: Admissible Accessibility

$\mathcal{N}(x) = \{y : A(y) \geq \tau\}$, with $S_A(x) = \log |\mathcal{N}(x)|$. This quantity becomes central in RSVP (Appendix K).

Theorem .17: Projection Does Not Determine Validity

Projection alone cannot determine validity. A second evaluation structure — admissibility — is required.

Proof. There exist outputs satisfying projection while violating external constraints; admissibility is the only mechanism to filter them. ■

The Admissibility Principle

Every intelligent system requires two distinct layers: *projection* $X \to Y$ (generating possibilities) and *admissibility* $A : Y \to \mathbb{R}$ (evaluating them). Generation without admissibility produces chaos. Admissibility without generation produces stagnation. Intelligence emerges from their interaction.

Sheaf Theory and Semantic Coherence

I.1 Introduction

Many systems consist of multiple local views — scientific theories, distributed databases, gesture recognition systems, knowledge archives, civilizations, perception itself. Each subsystem possesses only partial information. The central question is: *When do local truths combine into a global truth?*

Definition .46: Presheaf

A *presheaf* F on base space B assigns a set $F(U)$ to each open region $U \subseteq B$, together with restriction maps $\rho_{UV} : F(U) \to F(V)$ whenever $V \subseteq U$.

Definition .47: Local Section

A *local section* is an element $s \in F(U)$, representing a local interpretation, observation, or meaning.

Definition .48: Compatibility

Sections $s_U \in F(U)$ and $s_V \in F(V)$ are *compatible* if $s_U|_{U\cap V} = s_V|_{U\cap V}$. Compatibility means the local stories do not contradict each other.

Definition .49: Sheaf

A presheaf F is a *sheaf* if: whenever $\{U_i\}$ covers U and sections $s_i \in F(U_i)$ are pairwise compatible, there exists a *unique* global section $s \in F(U)$ with $s|_{U_i} = s_i$.

Theorem .18: Gluing Theorem

Compatible local information determines a unique global object.

Proof. This follows directly from the sheaf axiom: compatibility guarantees existence; uniqueness guarantees coherence. ■

Definition .50: Obstruction

An *obstruction* is a failure of compatibility: contradictory assumptions, inconsistent definitions, incompatible coordinate systems. Obstructions prevent global coherence and appear as topological defects in semantic space (impossible triangles, paradoxes, circular dependencies).

Example

Gesture recognition. Camera (U_1), pressure sensor (U_2), accelerometer (U_3) each produce a local section. Recognition is a gluing problem; the complete gesture is the global section.

Example

Semantic infrastructure. Documents are sections; repositories are covers; merges are gluing operations; conflicts are obstructions. Version control becomes sheaf theory.

Theorem .19: Global Meaning via Gluing

Global meaning exists only when local meanings are mutually compatible.

Proof. A global section exists if and only if the sheaf gluing condition holds. Failure of compatibility prevents construction of a global section. ■

The Sheaf Principle

Every coherent system consists of local sections, overlap regions, restriction maps, compatibility conditions, and a global section. Knowledge, memory, perception, language, science, and civilization are all attempts to construct global sections from local observations.

Accessibility Geometry

J.1 Introduction

Traditional physics focuses on state. Traditional logic focuses on truth. Traditional computation focuses on output. Accessibility theory instead focuses on *futures*. A state is characterized not merely by what it is, but by the set of admissible futures available to it.

Definition .51: Future and Admissible Future Sets

The *future set* is $\mathcal{F}(x) = \{y : x \rightsquigarrow y\}$. The *admissible future set* is $\mathcal{A}(x) = \{y \in \mathcal{F}(x) : A(y) \geq \tau\}$. Reachability is not coherence; admissibility filters futures.

Definition .52: Accessibility and Entropy

The *accessibility* of a state is $\Omega(x) = \mathrm{Vol}(\mathcal{A}(x))$. The *accessibility entropy* is $S(x) = \log \Omega(x)$. This generalizes statistical entropy: entropy becomes *logarithmic volume of admissible futures*, not merely disorder.

Definition .53: Accessibility Flow

$\frac{dx}{dt} = \nabla S(x)$. Trajectories climb accessibility; states evolve toward regions containing more admissible futures.

Definition .54: Accessibility Structures

An *accessibility well* is a region where $S(x)$ decreases in all directions (dead ends, traps, addictions, bureaucratic lock-in). An *accessibility peak* is a local maximum of S (broad education, robust infrastructure, flexible institutions). An *accessibility ridge* is a connected region of sustained high S (scientific paradigms, trade routes, semantic pathways).

Definition .55: Accessibility Relaxation

$\frac{dx}{dt} = -\nabla V(x) + \alpha \nabla S(x)$. The competition between energetic and accessibility gradients produces rich dynamics. This equation serves as the prototype for RSVP.

Theorem .20: Every Constraint Induces an Accessibility Field

Any constrained dynamical system induces an accessibility field.

Proof. Constraints determine admissible futures; the admissible future set determines $\Omega(x)$; $S(x) = \log \Omega(x)$ defines the field. ■

The Accessibility Principle

The significance of a state is determined not merely by its present structure but by the volume of coherent futures accessible from it. Objects become future-generating structures. Knowledge becomes future expansion. Learning becomes accessibility growth. Intelligence becomes accessibility navigation. Meaning becomes accessibility preservation.

The Relativistic Scalar–Vector Plenum

K.1 Introduction

The objective of RSVP is to describe structure formation, persistence, cognition, semantics, and cosmology within a common mathematical framework. Instead of treating matter as fundamental, RSVP treats fields as fundamental. Instead of treating space as an empty container, RSVP treats it as a structured plenum. Instead of treating entropy as disorder, RSVP interprets entropy as accessibility.

Definition .56: RSVP State

The *RSVP state* is $\Psi = (\Phi, \mathbf{v}, S)$ where: $\Phi : M \to \mathbb{R}$ is scalar density, $\mathbf{v}$ is vector flow, and $S : M \to \mathbb{R}$ is accessibility entropy. All observable structures arise from interactions among these three fields.

Definition .57: Scalar Conservation

$\frac{\partial \Phi}{\partial t} + \nabla \cdot (\Phi \mathbf{v}) = Q$. When $Q = 0$, density is conserved.

Definition .58: Accessibility-Coupled Transport

The accessibility flux: $\mathbf{J} = \Phi \mathbf{v} + \lambda \Phi \nabla S$. Accessibility acts as a generalized pressure, driving density toward regions of high future accessibility.

Definition .59: RSVP Field Equations

The coupled evolution equations are:

$$\frac{\partial \Phi}{\partial t} = -\nabla \cdot (\Phi \mathbf{v} + \lambda \Phi \nabla S) + Q \tag{1}$$

$$\frac{\partial \mathbf{v}}{\partial t} + (\mathbf{v} \cdot \nabla)\mathbf{v} = -\nabla P + \nu \nabla^2 \mathbf{v} + \gamma \nabla S \tag{2}$$

$$\frac{\partial S}{\partial t} = D_S \nabla^2 S + R(\Phi, \mathbf{v}, S) \tag{3}$$

Definition .60: RSVP Action Functional

$$\mathcal{S} = \int \mathcal{L}\, d^4x, \qquad \mathcal{L} = \tfrac{1}{2}|\partial\Phi|^2 + \tfrac{1}{2}|\nabla \times \mathbf{v}|^2 + \tfrac{1}{2}|\nabla S|^2 - V(\Phi, S) + \lambda\, \mathbf{v} \cdot \nabla S.$$

The final coupling term links flow and accessibility. Euler–Lagrange variation yields the field equations above.

Definition .61: Lamphron and Lamphrodyne

Let $\Lambda = \nabla S$ (the accessibility gradient field). *Lamphron* regions (λ_+) have high accessibility; *lamphrodyne* regions (λ_-) experience accessibility descent. Structure emerges from their interaction.

Accessibility Relaxation Hypothesis

Large-scale evolution is driven not by expansion but by accessibility relaxation. Systems evolve toward configurations reducing accessibility gradients. The universe relaxes; it need not expand.

The RSVP Principle

Structure emerges wherever density, flow, and accessibility mutually reinforce one another: $(\Phi, \mathbf{v}, S) \longrightarrow$ Structure. Regions of concentrated density, coherent flow, and sustained accessibility together generate persistent forms — whether physical, cognitive, semantic, or civilizational.

Semantic Fields and Simulated Agency

L.1 Introduction

The RSVP formalism does not depend upon matter. The same equations apply to cognition, memory, concepts, language, and institutions. This appendix shows that semantic systems may be represented as accessibility-driven field dynamics.

Definition .62: Semantic Manifold and Fields

A *semantic manifold* M_s has points corresponding to semantic states (concepts, propositions, memories, goals). The *semantic density field* Φ_s measures conceptual concentration; the *semantic velocity field* $\mathbf{v}_s$ represents directional conceptual motion; the *semantic accessibility field* S_s measures logarithmic future thought volume.

Definition .63: Thought Trajectory

A *thought process* is a path $\gamma : [0, T] \to M_s$. Reasoning becomes navigation. The trajectory replaces the static proposition as the primary object.

Definition .64: Cognitive Attractor

A *conceptual attractor* is a region $A \subset M_s$ toward which nearby trajectories converge (recurring ideas, habits of reasoning). A *memory well* is a local maximum of Φ_s; recall corresponds to entering its basin of attraction.

Definition .65: Simulated Agency

An *agent model* is a predictive field $A(x)$ estimating future trajectories. The system constructs internal simulations $\hat{X}$ as sparse approximations of reality X.

Theorem .21: Latent Trajectory Reconstruction

An observer interacting with incomplete information must construct latent trajectory models.

Proof. Projection destroys information (Appendix B); multiple hidden states produce identical observations; reconstruction therefore requires inference over latent trajectories. ■

Definition .66: Semantic Soliton

A *semantic soliton* is a stable localized structure in semantic space (identities, worldviews, scientific paradigms, mathematical concepts). They persist despite perturbation and propagate through minds and cultures.

Definition .67: Meaning as Accessibility Preservation

The *meaning* of a structure is its ability to preserve coherent future accessibility. Meaning is therefore functional, not symbolic or referential.

Fundamental Principle of Simulated Agency

An intelligent system constructs sparse internal simulations of latent trajectories and navigates those simulations using accessibility gradients:

$$\text{Observation} \to \text{Projection} \to \text{Simulation} \to \text{Accessibility Navigation} \to \text{Action}.$$

Semantic Infrastructure and Category Theory

M.1 Introduction

How do multiple cognitive systems interact? How do ideas combine? How do documents merge? How do repositories evolve? The central claim is: *Knowledge is not fundamentally stored. Knowledge is composed.* The mathematical language of composition is category theory.

Definition .68: Semantic Category

The *semantic category* **Sem** consists of: *objects* (concepts, documents, theories, software modules) and *morphisms* $f : A \to B$ (translation, summarization, refinement, compilation, abstraction). Composition satisfies associativity; each object has an identity morphism.

Definition .69: Semantic Merge via Pushout

Given modules A and B sharing interface I: $A \leftarrow I \to B$, the *merge* is the pushout $P = A \sqcup_I B$. This formalizes document merging, repository merging, and knowledge integration.

Definition .70: Semantic Conflict

A *semantic conflict* occurs when no admissible pushout exists: contradictory definitions, incompatible assumptions, conflicting ontologies. Conflict becomes a mathematical obstruction.

Definition .71: Admissible Merge

A merge is *admissible* if $A(P) \geq \tau$. Even if a pushout exists, the result may be incoherent; admissibility filters poor merges.

Definition .72: Semantic Functor

A *semantic functor* $F : \mathbf{Sem}_1 \to \mathbf{Sem}_2$ preserves compositional structure, transporting meaning between domains (mathematics $\to$ software, theory $\to$ simulation, gesture $\to$ symbol).

Definition .73: Version History

A *version history* is a morphism sequence $V_0 \to V_1 \to V_2 \to \cdots$. History becomes categorical; traditional version control is a special case.

Theorem .22: Coherent Knowledge Systems are Categories

A coherent knowledge system is a category whose objects admit admissible composition.

Proof. Objects alone are insufficient; morphisms provide transformation; composition provides growth; admissibility guarantees coherence. ■

The Semantic Infrastructure Principle

Knowledge evolves through admissible composition:

$$\text{Objects} \to \text{Morphisms} \to \text{Composition} \to \text{Accessibility} \to \text{Civilization}.$$

A civilization is not merely a population. It is a semantic infrastructure that preserves, composes, and transmits accessibility across generations.

Learning Geometry and Curriculum Dynamics

N.1 Introduction

Traditional educational theory assumes knowledge consists of facts accumulated over time. The accessibility framework suggests otherwise: *knowledge is not accumulated — knowledge is navigated. Education becomes the engineering of trajectories through semantic space.*

Definition .74: Educational State Space

A learner occupies $x(t) \in M$ (semantic manifold). Learning is motion through M; the learner is a trajectory.

Definition .75: Accessibility Value of a Concept

$S(c) = \log |\mathcal{A}(c)|$, where $\mathcal{A}(c)$ is the set of future concepts reachable from c. Concepts with large accessibility act as gateways (algebra, geometry, logic, probability, programming).

Definition .76: Curriculum as Vector Field

A *curriculum field* $\mathbf{C}(x)$ guides educational motion. Different curricula correspond to different vector fields; the same learner may reach different destinations depending on the field.

Example

Geometry-first: geometry $\to$ trigonometry $\to$ calculus $\to$ differential geometry.
Algebra-first: algebra $\to$ functions $\to$ calculus $\to$ abstract algebra.
Logic-first: favors formal reasoning, theorem construction, computational thinking.
Statistics-first: probabilistic rather than deterministic reasoning. Each produces a

distinct accessibility landscape.

Definition .77: Educational Phase Transition

A *phase transition* occurs when a small conceptual change produces a large increase in accessibility (learning algebra, understanding proof, mastering recursion, discovering coordinate systems).

Definition .78: Optimal Curriculum

An *optimal curriculum* maximizes $\int_0^T S_E(t)\,dt$, where $S_E = \log|\mathcal{A}(x)|$ is educational entropy. The objective is not memorization; it is future opportunity.

Theorem .23: Curriculum Divergence Theorem

Distinct curriculum fields generally produce distinct cognitive trajectories.

Proof. Distinct vector fields $\mathbf{C}_1 \neq \mathbf{C}_2$ generate distinct integral curves except in degenerate cases. ■

Educational Accessibility Principle

The purpose of education is not information transfer. The purpose of education is accessibility expansion:

$$\text{Education} \to \text{Conceptual Navigation} \to \text{Accessibility Expansion} \to \text{Agency}.$$

Civilization Dynamics and Collective Memory

O.1 Introduction

Individuals learn. Civilizations remember. The central question is: *How does accessibility persist beyond individual lifetimes?* A civilization is not merely a collection of people. It is a mechanism for preserving trajectories.

Definition .79: Civilizational State

$C = (P, K, I, T)$ where P is population, K is knowledge, I is infrastructure, and T is transmission capacity.

Definition .80: Collective Memory

Collective memory is the persistent storage of semantic structures beyond individual agents (books, libraries, archives, software repositories, institutions, traditions). The *memory density field* $M_c(x)$ captures its geographic distribution.

Definition .81: Infrastructure as Accessibility Storage

Roads preserve transportation futures; power grids preserve energetic futures; libraries preserve semantic futures; universities preserve educational futures. *Infrastructure is any structure preserving future accessibility.*

Definition .82: Cultural Soliton

A *cultural soliton* is a stable localized semantic structure persisting for centuries (major religions, mathematical traditions, legal systems, foundational myths). They survive perturbation and propagate through populations.

Definition .83: Civilizational Accessibility

$S_C = \log |\mathcal{A}_C|$, where $\mathcal{A}_C$ is the set of coherent futures available to the civilization. This becomes the central macro-observable.

Definition .84: Accessibility Collapse

Accessibility collapse occurs when $\frac{dS}{dt} \ll 0$: institutional breakdown, ecological failure, information loss, infrastructure decay. Collapse is not merely destruction — it is future contraction.

Theorem .24: Adaptive Capacity Theorem

Civilizations with larger accessible future volumes possess greater adaptive capacity.

Proof. Larger accessibility implies more admissible responses to perturbation; more responses imply greater resilience. ■

Theorem .25: Civilizational Persistence Theorem

The long-term persistence of a civilization depends upon its ability to preserve and transmit accessibility across generations.

Proof. Future generations inherit possibilities through transmission structures; loss of transmission reduces accessible futures; sustained transmission preserves future opportunity. ■

The Accessibility Civilization Principle

The fundamental function of intelligence, education, science, infrastructure, and civilization is the preservation and expansion of coherent future accessibility:

Constraint → Projection → Meaning → Knowledge → Civilization → Accessibility.

At every scale — from gestures to concepts, from minds to institutions, from semantic fields to cosmological fields — the same structure appears:

Persistent systems are accessibility-preserving systems.

Bibliography

McNeill, David (1992). *Hand and Mind: What Gestures Reveal about Thought*. Chicago: University of Chicago Press.